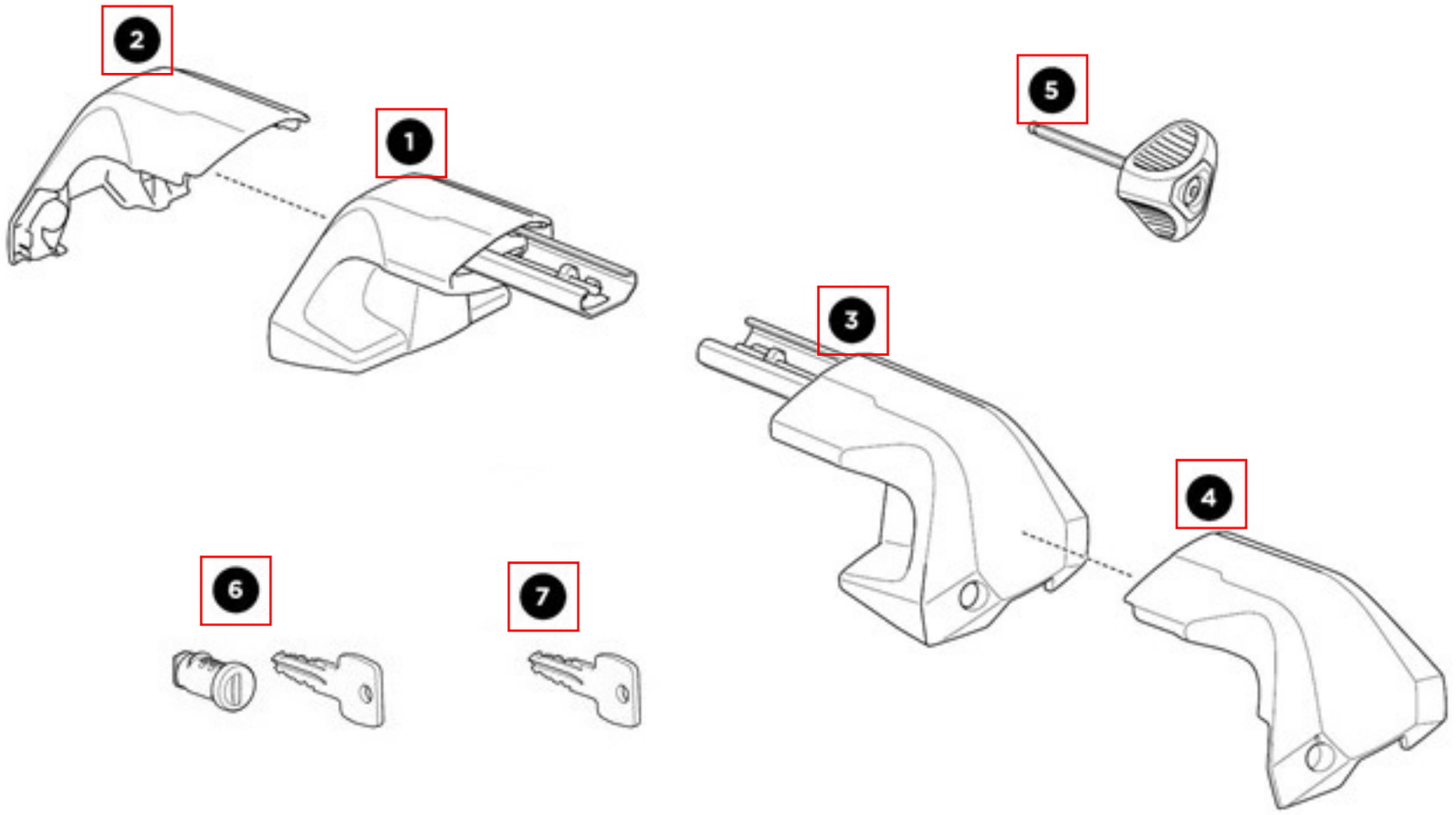
2
1
5
3
4
6
7

Alkatrész	SKU
1. Complete Foot Left	1500054251
2. Front Cover Left	1500054249
3. Complete Foot Right	1500054252
4. Front Cover Right	1500054250
5. Torque Key 3Nm	1500052984
6. Lock Cylinder	Go to "Keys & Locks"
7. Key	Go to "Keys & Locks"