Thule Bike Stacker

5781

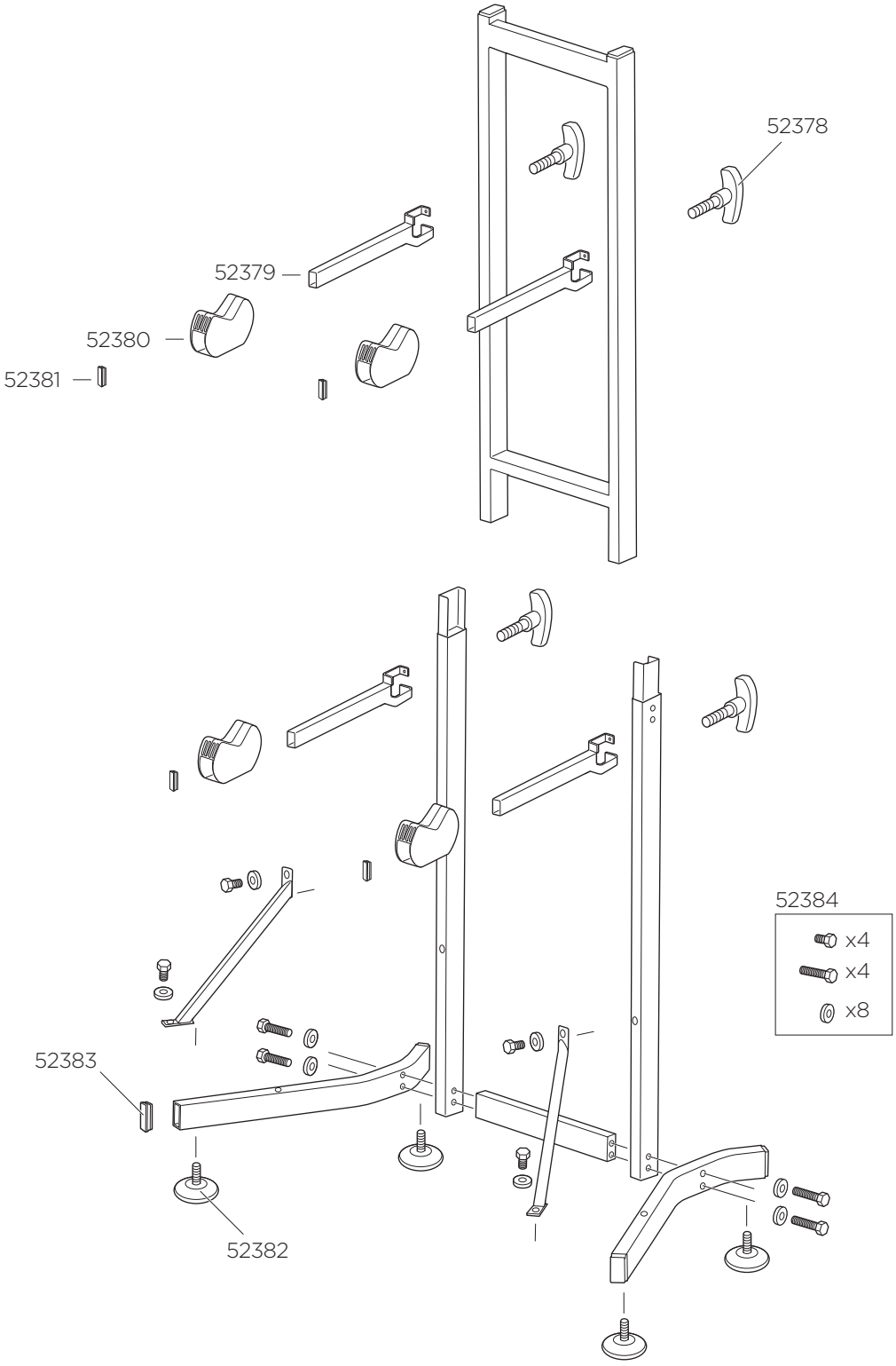

PART OF THULE GROUP