› Instructions

Thule SmartRack

730402, 730404,
730422, 730424

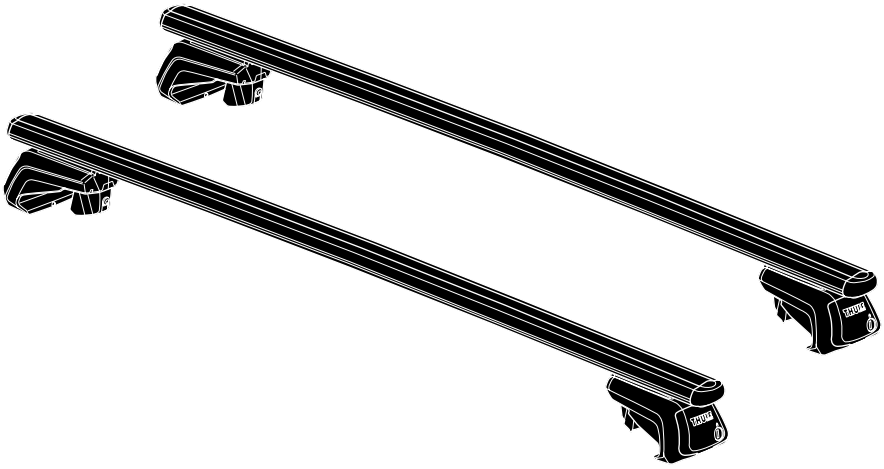

THULE GUARANTEE
THULE.COM

5561252001

Bring your life
thule.com

EN Roof mounted load carrier
FR Barre de toit
ES Portaequipajes de techo
DE Lastenträger zur Dachmontage
NL Dakdrager
PT Barra para montagem no tejadilho
IT Barra portatutto da installare sul tetto
SV Takmonterad lasthållare
DK Tagmonteret lastholder
NO Takmontert lasteholder
FI Katolle asennettava teline
IS Farangursgrind á þak
ET Katusele paigaldatav katuseraam
LV Uz jumta uzstādāms kravas turētājs
LT Ant stogo tvirtinamas krovinių laikiklis
RU Грузовой багажник
UK Багажник для даху
PL Uchwyt na bagażnik bazowy montowany na dachu
CS Nosič pro montáž na střechu
HU Tetőre szerelhető csomagszállító
RO Suport încărcătură montat pe acoperiș
SK Strešný nosič
SL Nosilec za strešni prtljažnik
BG Багажник, монтиран върху покрива

HR Krovni nosač tereta
EL Σχάρα οροφής για μεταφορά φορτίου
TR Araç üstüne bağlanan yük taşıyıcı
MT Pengangkut muatan yang dipasang pada bumbung
HE גגון מטען לגג הרכב
AR حامل نقل مثبَّت على السقف

ZH (CN) 顶置行李架
ZH (TW) 車頂荷重支架
JA ルーフマウント型ロードキャリア
KO 루프 장착 화물 캐리어
TH โครงยึดของบรรทุกแบบติดตั้งบนหลังคา
MS Garrier ta' tagħbija mmuntat fuq is-saqaf

CITY CRASH
Complies with ISO norm

ISO 11154-E

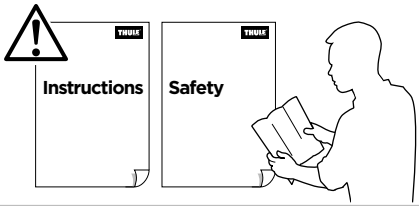

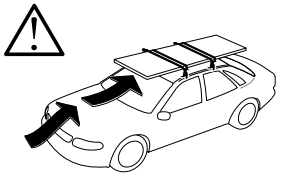



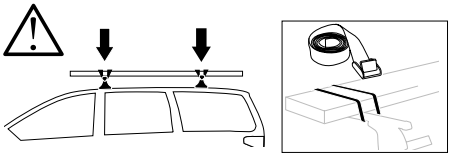

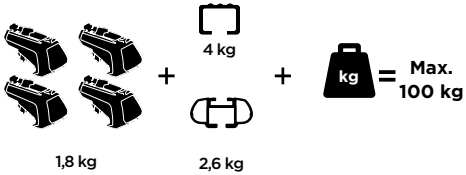

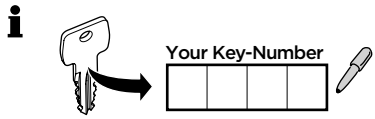

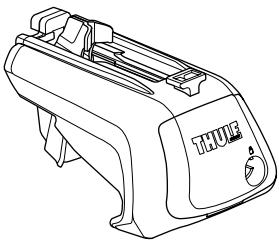

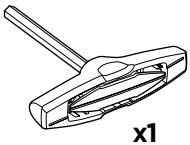

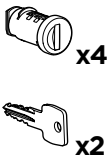

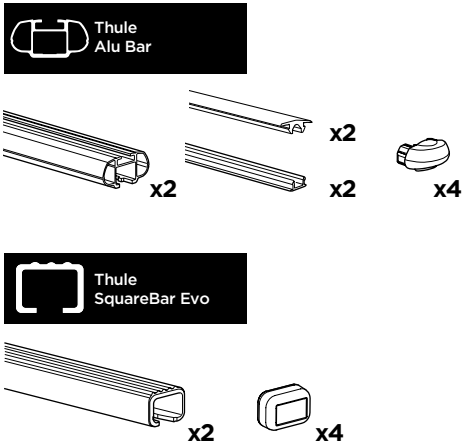

›Mounting Tutorial

Thule SmartRack

1

Thule Alu Bar

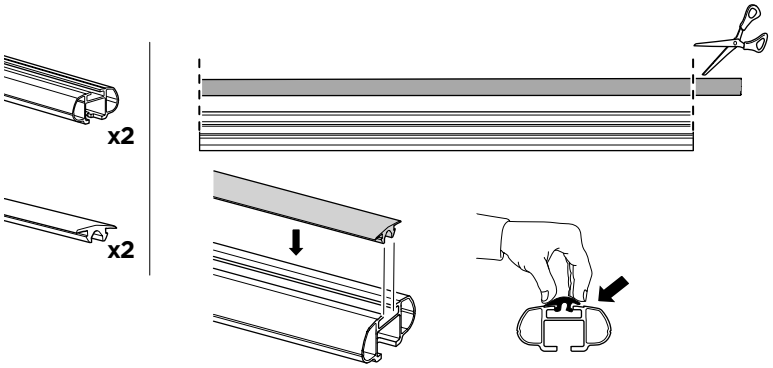

x2

2

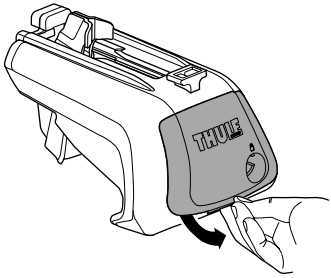

x4

3

Thule Alu Bar

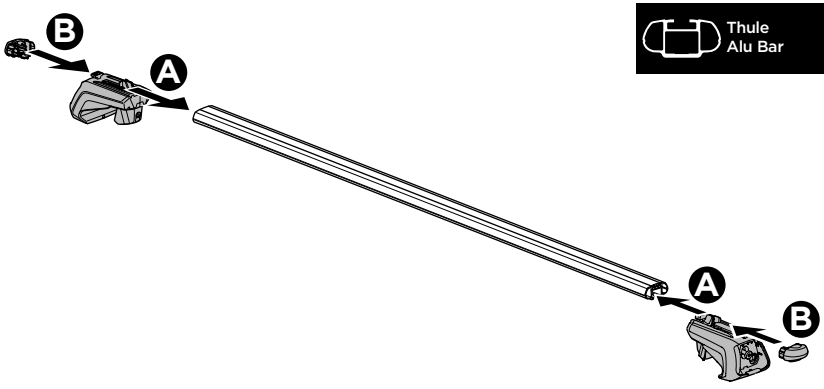

x2

Thule
SquareBar Evo

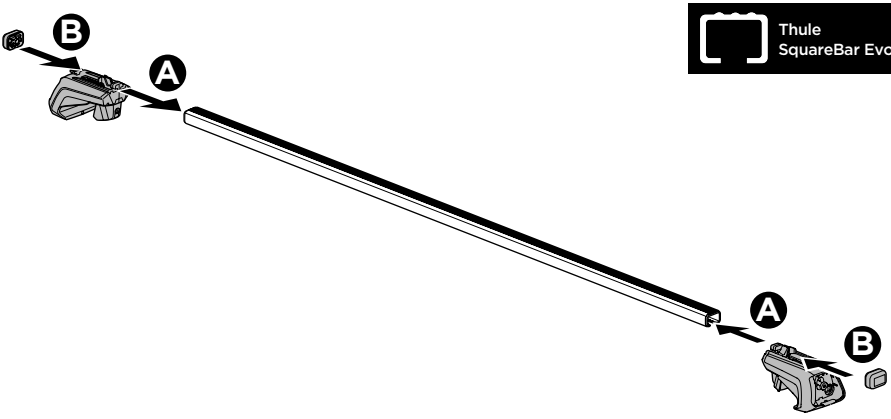

x2

4

A

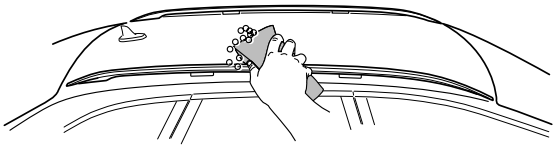

B

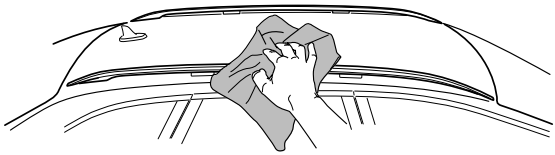

5

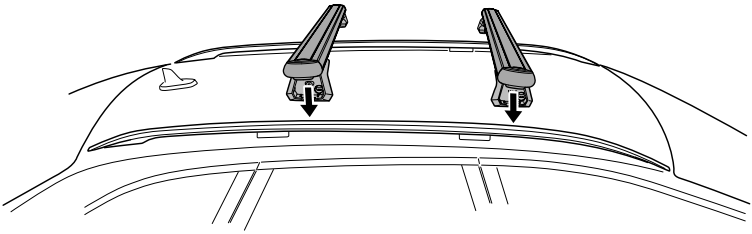

i

~700 mm

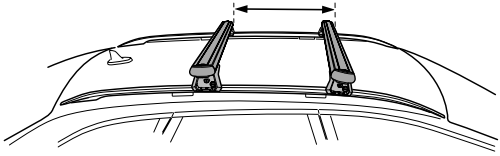

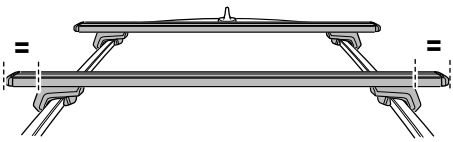

6

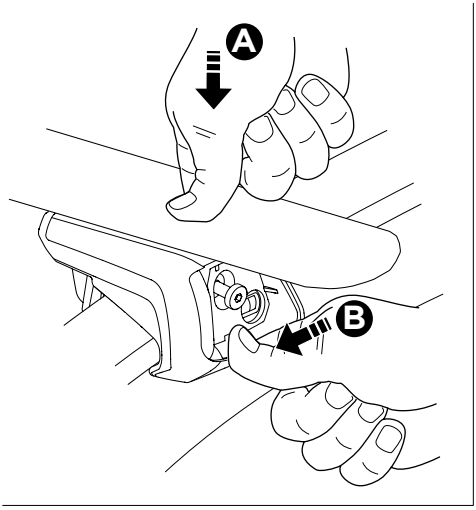

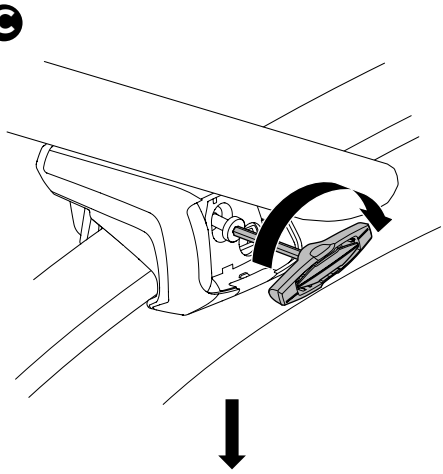

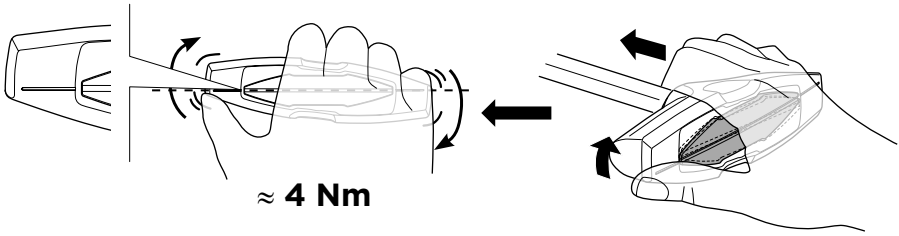

≈ **4 Nm**

x4

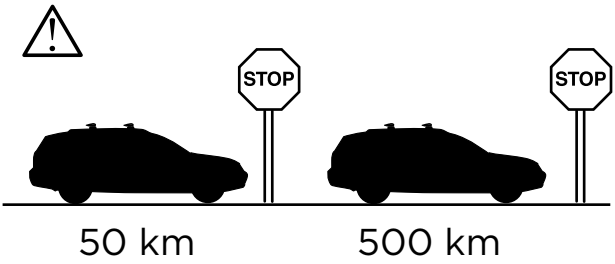

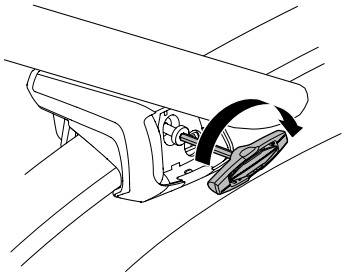

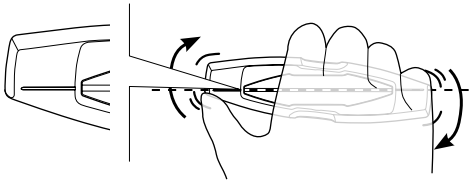

7

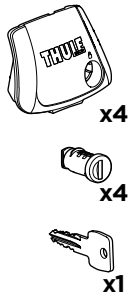

A

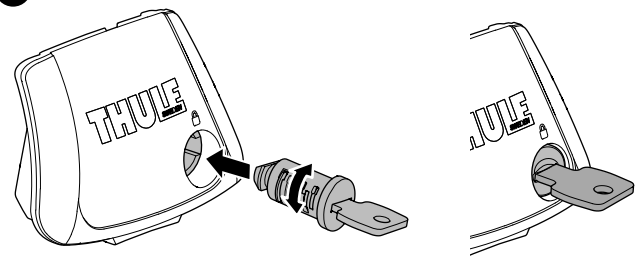

x4

B

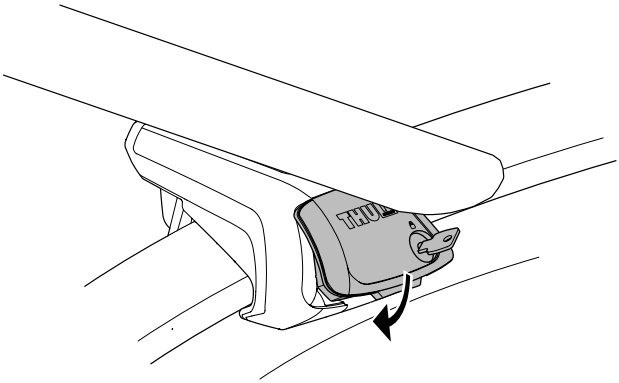

x4

C

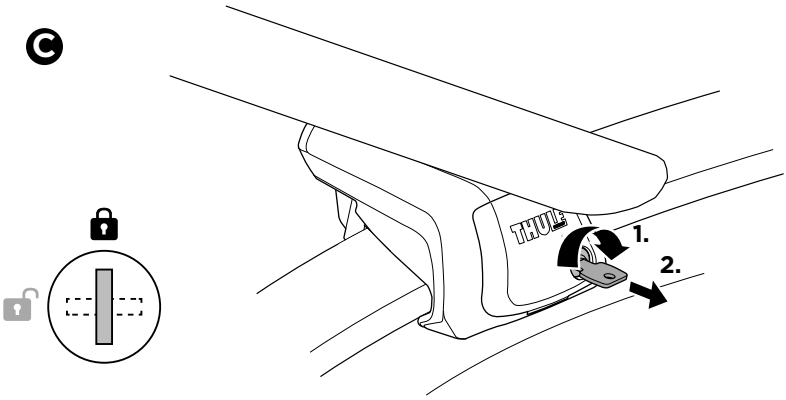

x4

8

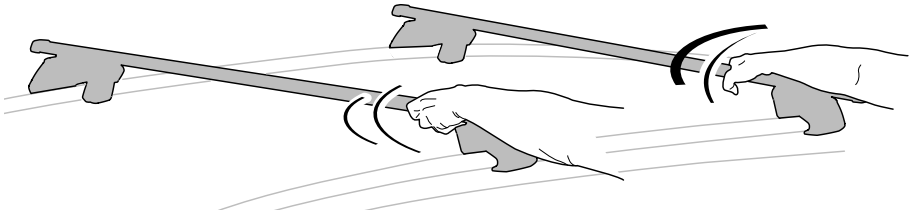

9

Thule
Alu Bar

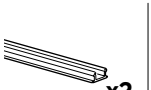

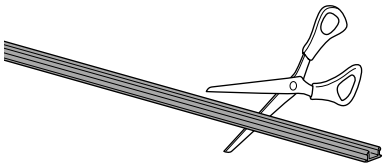

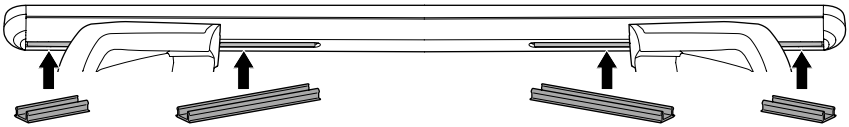

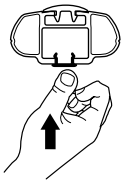

x2

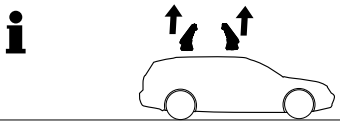

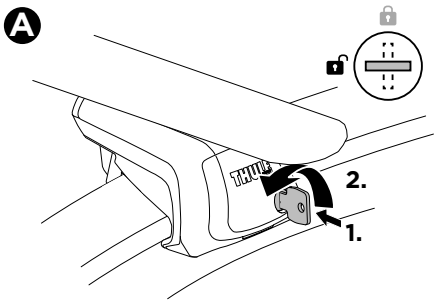

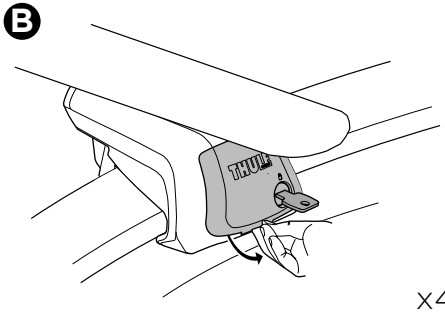

x4

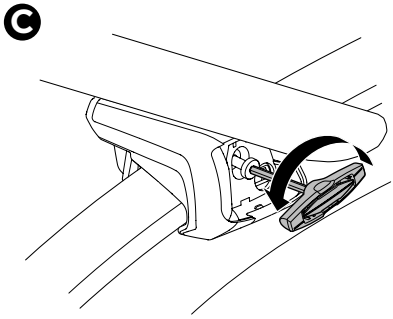

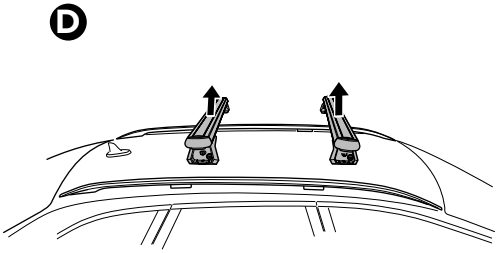

x4

Thule One-Key System



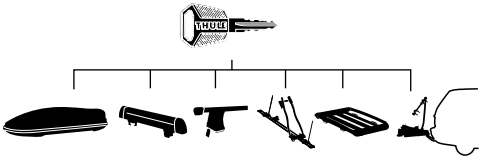

450400 (x4)
450600 (x6)
450800 (x8)
451200 (x12)
451600 (x16)

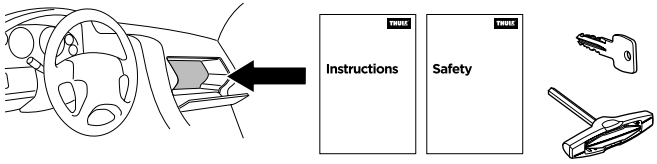

Thule Sweden AB, Borggatan 5
335 73 Hillerstorp, SWEDEN

info@thule.com

www.thule.com

» PART OF THULE GROUP

© Thule Group 2021. All rights reserved.

5561252001