Thule SnowPack Extender

7325

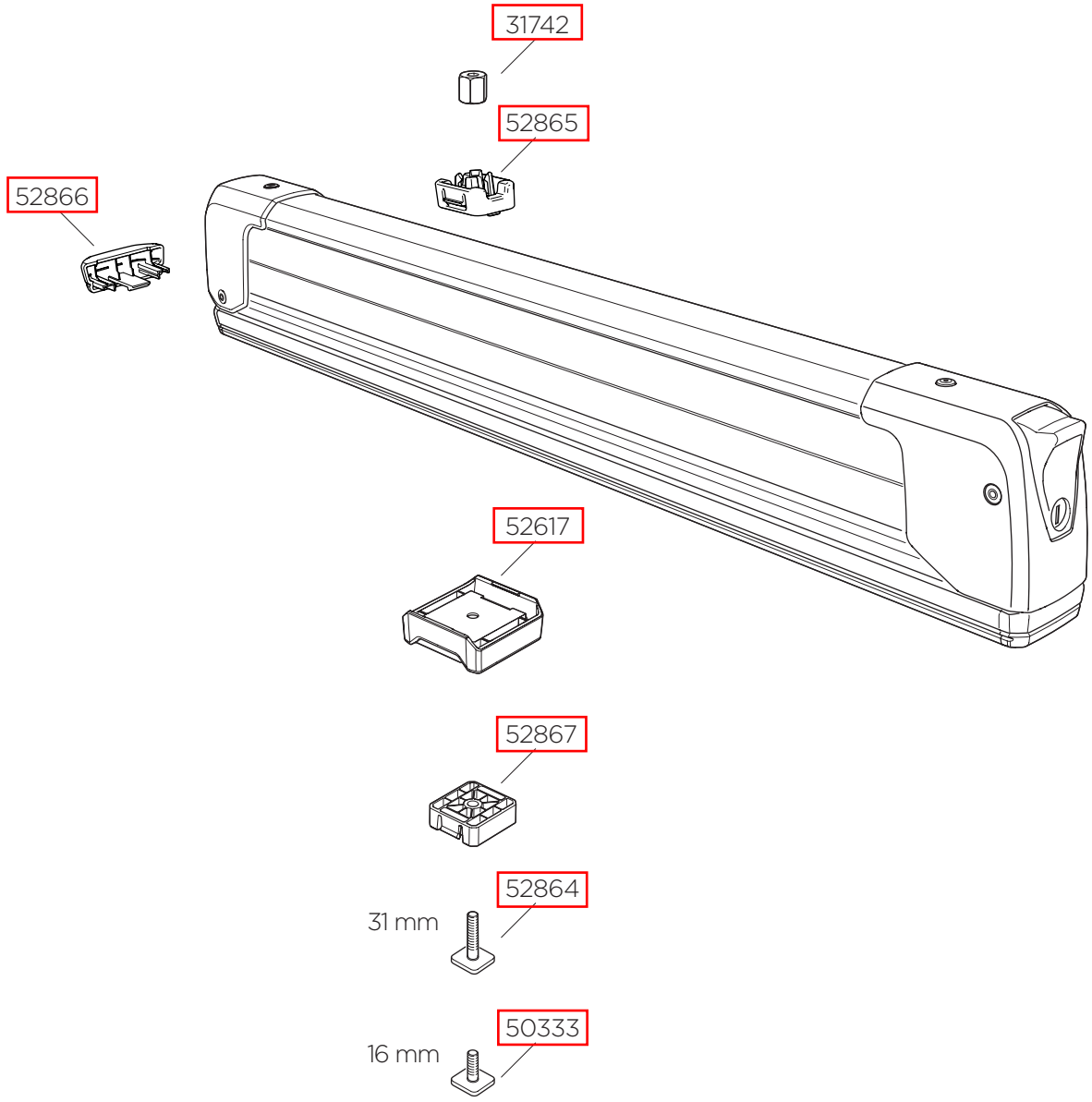

Thule SquareBar Adapter **8897** x4

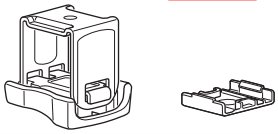

= N.....

No
N001-N200
Sparepart No
1500001001 - 1500001200

+

No
N001-N200
Sparepart No
1500002001 - 1500002200