1 Kit 5108

HONDA CR-V, 5-dr SUV, 12-16* / 12-18

*North America

ISO 11154-E

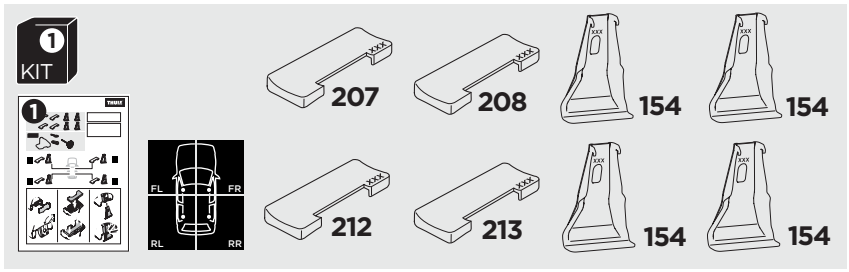

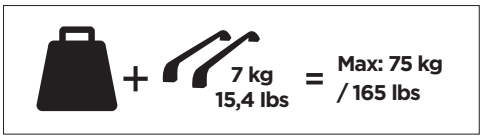

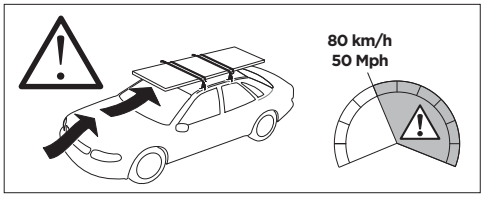

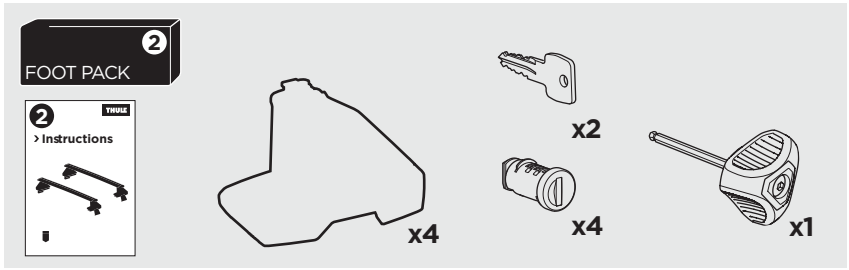

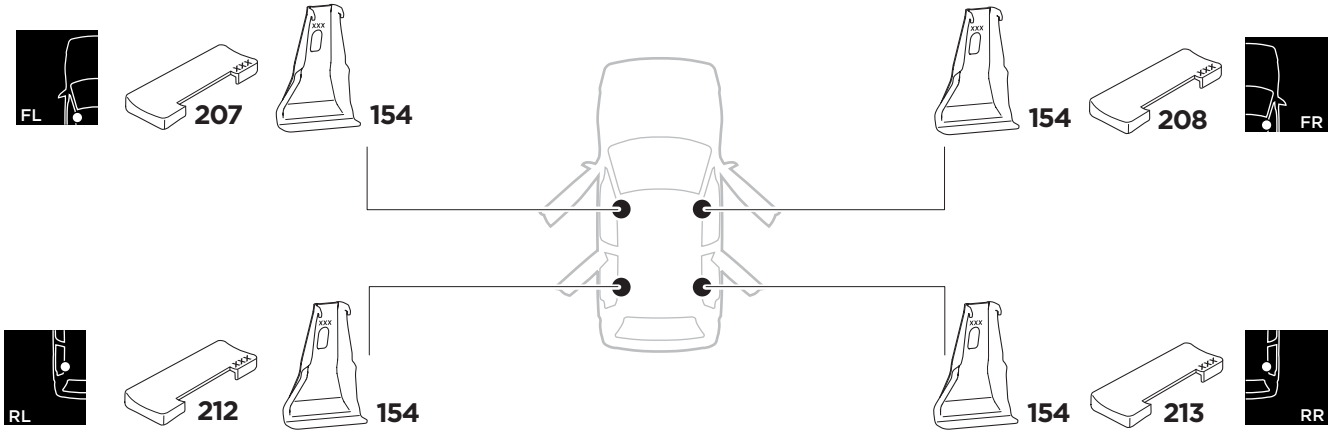

1



x4

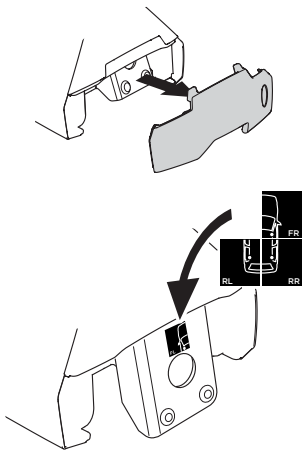

2

x4

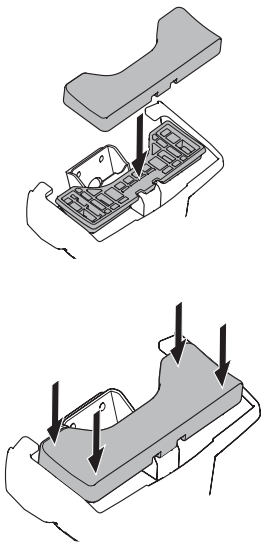

3

x4

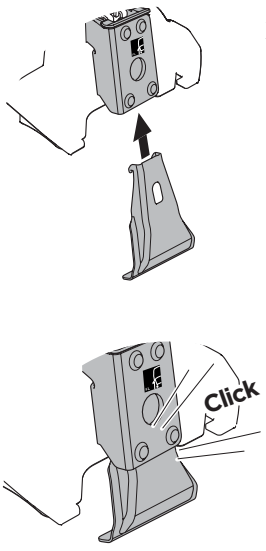



2

521-5108-02

Bring your life
thule.com

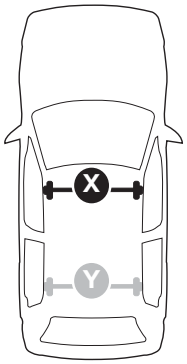

THULE WingBar Evo	THULE WingBar Edge	THULE WingBar	THULE SquareBar	Evo X (scale)	Edge X (scale)
HONDA CR-V, 5-dr SUV, 12-16* / 12-18				**45**	**G**

THULE ProBar	THULE SlideBar	X (mm/inch)
HONDA CR-V, 5-dr SUV, 12-16* / 12-18		**1101 mm / 43 3/8“**

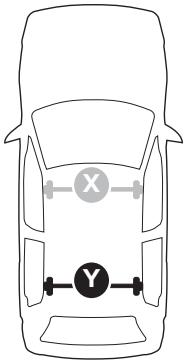

THULE WingBar Evo	THULE WingBar Edge	THULE WingBar	THULE SquareBar	Evo Y (scale)	Edge Y (scale)
HONDA CR-V, 5-dr SUV, 12-16* / 12-18				**42**	**M**

THULE ProBar	THULE SlideBar	Y (mm/inch)
HONDA CR-V, 5-dr SUV, 12-16* / 12-18		**1071 mm / 42 1/8“**

	W (mm/inch)	Z (mm/inch)
HONDA CR-V, 5-dr SUV, 12-16* / 12-18	**700 mm / 27 1/2“**	**400 mm / 15 3/4“**

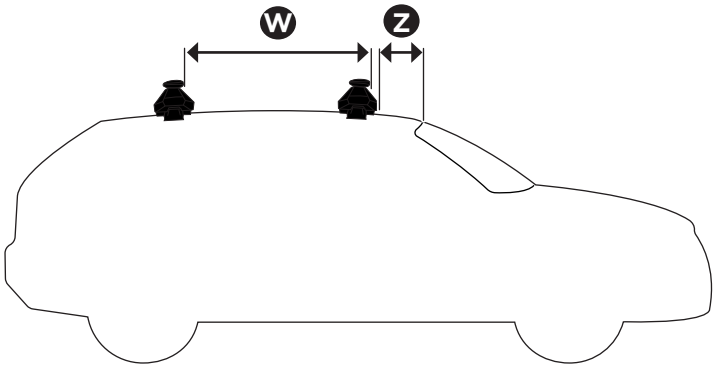

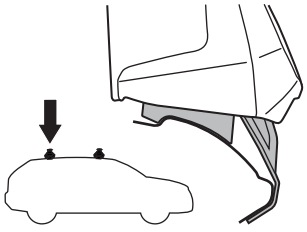

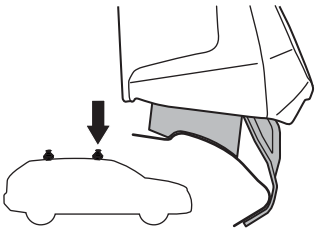





Thule Sweden AB, Borggatan 5
335 73 Hillerstorp, SWEDEN
» PART OF THULE GROUP

info@thule.com

© Thule Group 2018. All rights reserved.

www.thule.com

521-5108-02