# 1 Kit 5126

**HONDA Jazz,** 5-dr Hatchback, 08-14

ISO 11154-E

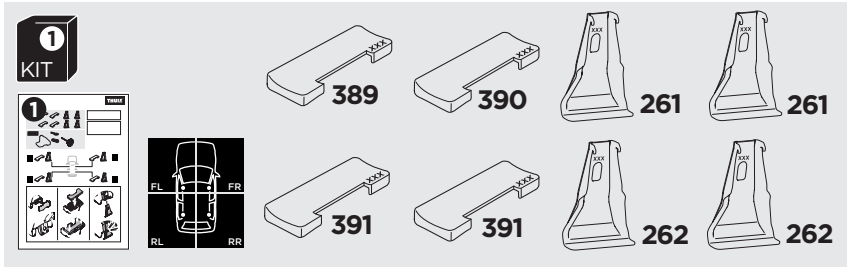


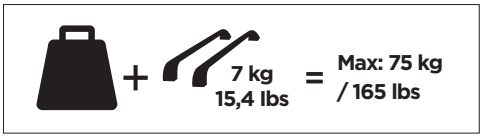


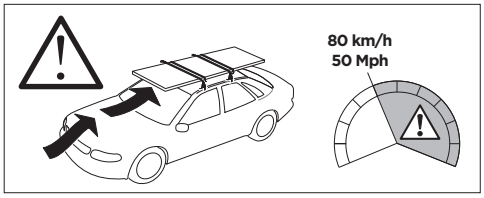


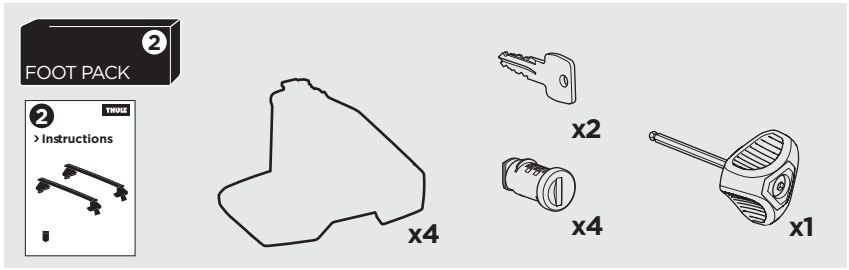


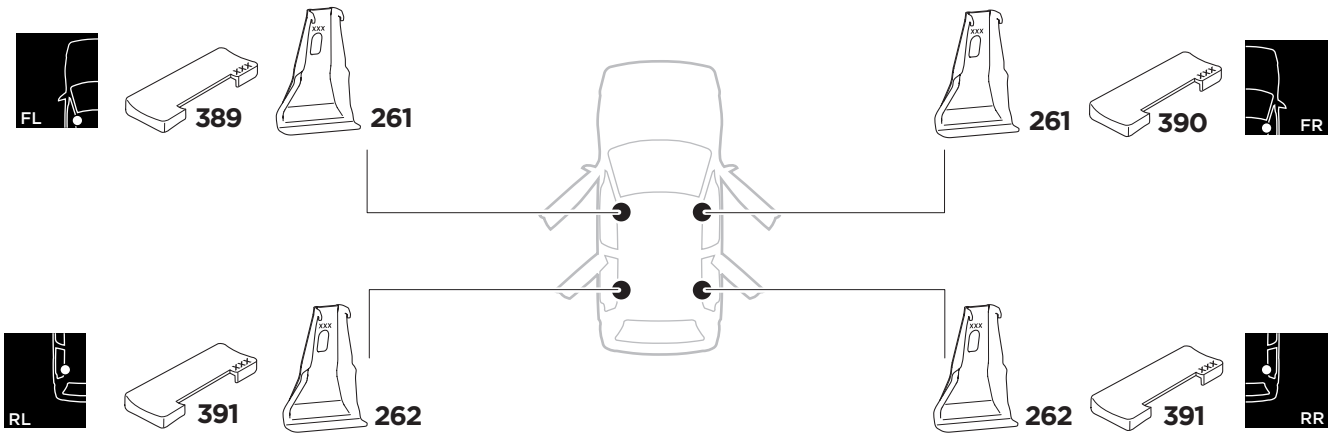


## 1

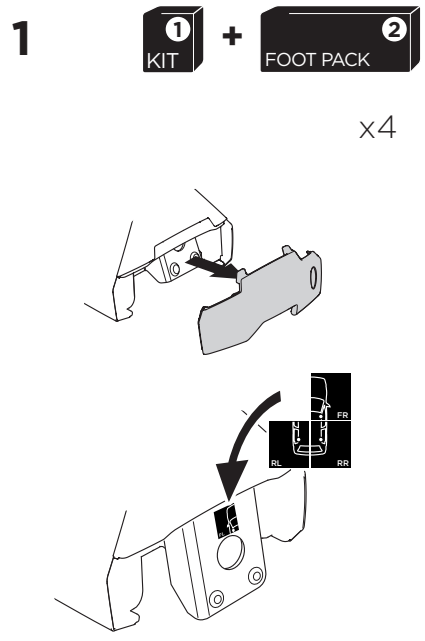


## 2

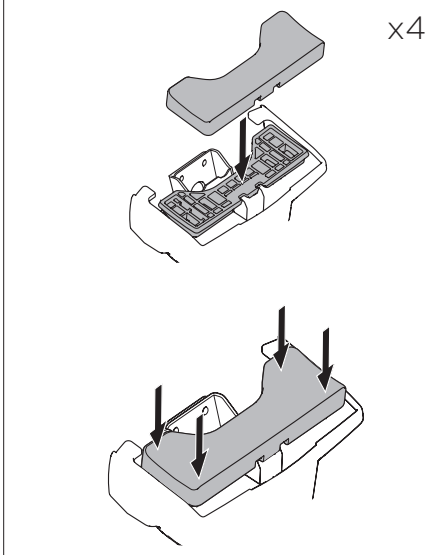


## 3

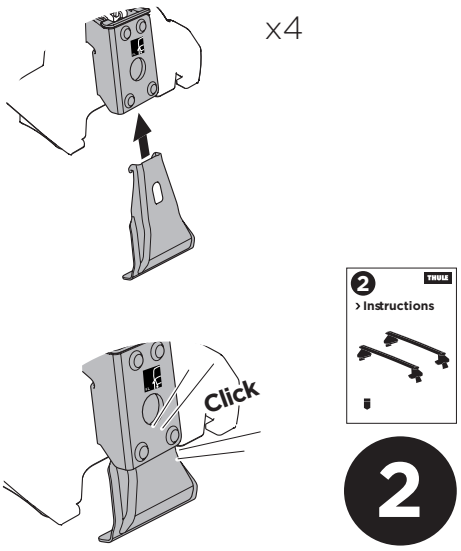

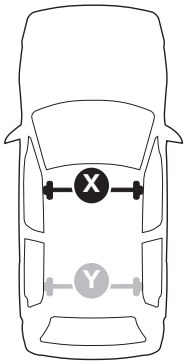


| THULE WingBar Evo / THULE WingBar Edge / THULE WingBar / THULE SquareBar | Evo X (scale) | Edge X (scale) |
|---|---|---|
| **HONDA Jazz,** 5-dr Hatchback, 08-14 | **35,5** | **H** |

| THULE ProBar / THULE SlideBar | X (mm/inch) |
|---|---|
| **HONDA Jazz,** 5-dr Hatchback, 08-14 | **1006 mm / 39 5/8“** |

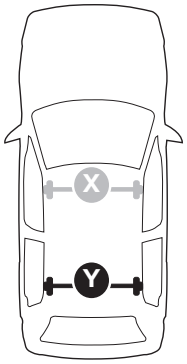


| THULE WingBar Evo / THULE WingBar Edge / THULE WingBar / THULE SquareBar | Evo Y (scale) | Edge Y (scale) |
|---|---|---|
| **HONDA Jazz,** 5-dr Hatchback, 08-14 | **28** | **E** |

| THULE ProBar / THULE SlideBar | Y (mm/inch) |
|---|---|
| **HONDA Jazz,** 5-dr Hatchback, 08-14 | **931 mm / 36 5/8“** |

| | W (mm/inch) | Z (mm/inch) |
|---|---|---|
| **HONDA Jazz,** 5-dr Hatchback, 08-14 | **700 mm / 27 1/2“** | **310 mm / 12 1/4“** |

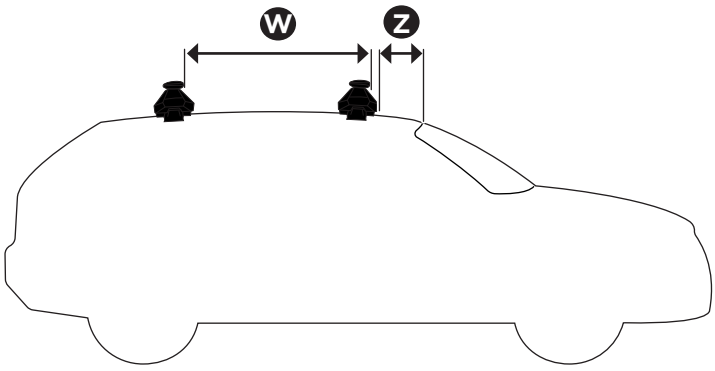


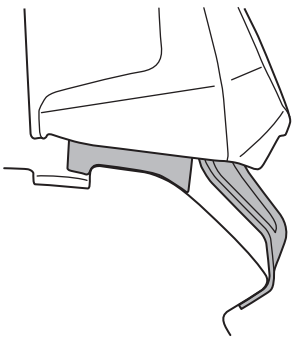







Thule Sweden AB, Borggatan 5
335 73 Hillerstorp, SWEDEN
» PART OF THULE GROUP

info@thule.com

www.thule.com

© Thule Group 2018. All rights reserved.