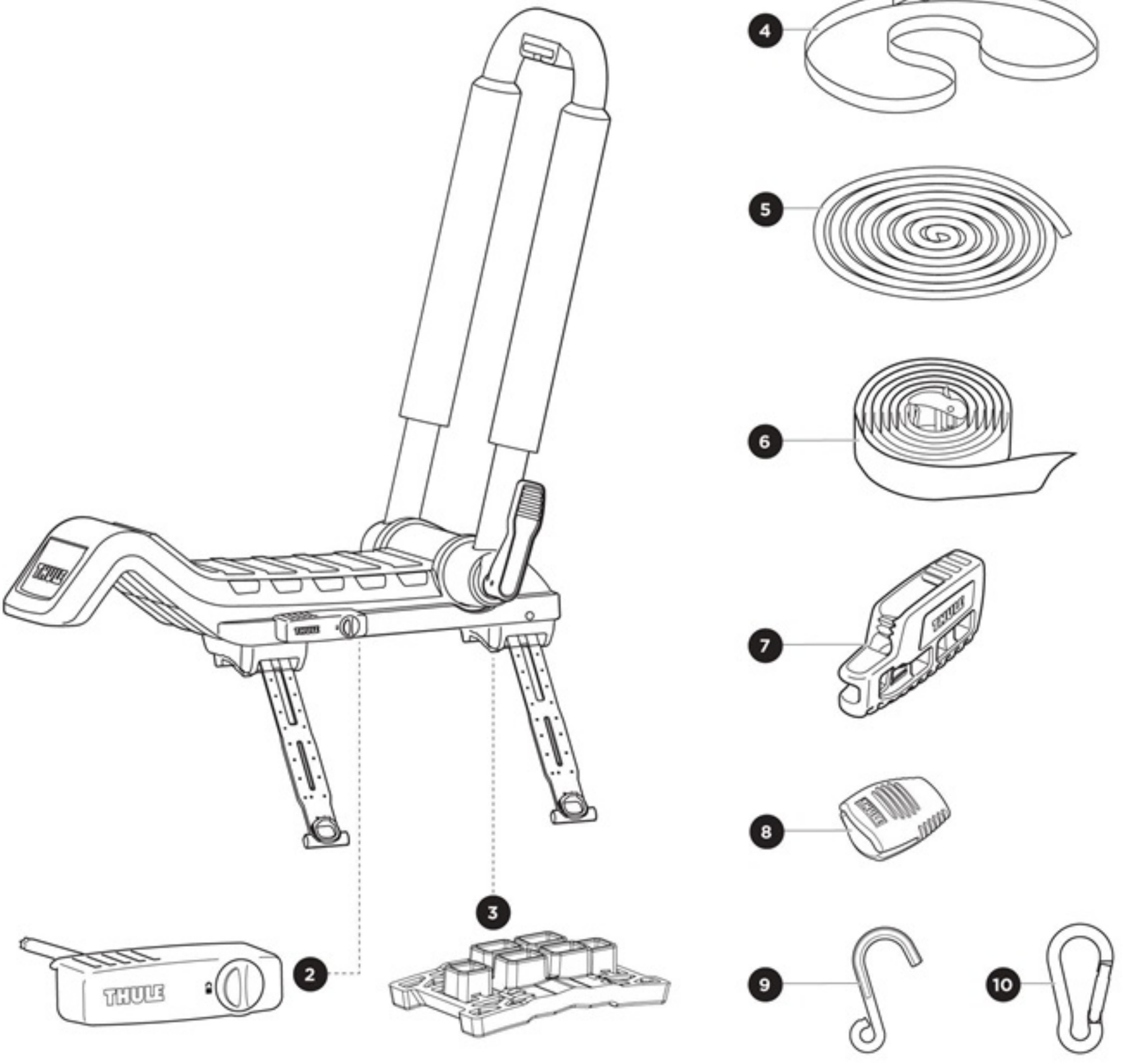
4
5
6
7
8
THULE
2
3
9
10

Alkatrész	SKU
2. Tool with Lock Plug	1500052963
3. Bar Pad	1500056680
4. Attachment Strap	1500052835
5. Rope 1/4" Diameter	1500052962
7. Tie-Down Cleat	1500052960
8. Buckle Protector	1500034345
9. Hook Flat	1500052834
10. Carabiner	1500052961