› Instructions

Thule Foldable Loading Ramp
9787

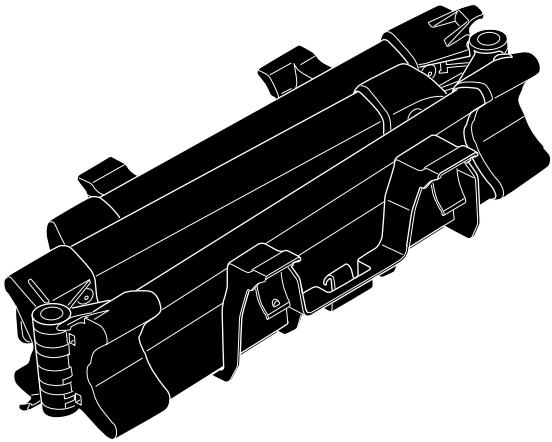

THULE GUARANTEE
THULE.COM

5562237001

Bring your life
thule.com

i

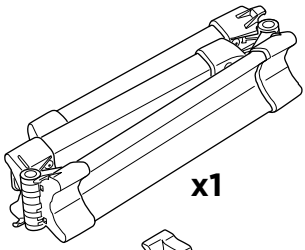

x1

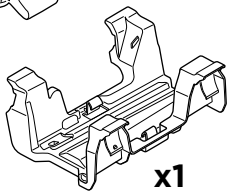

x1

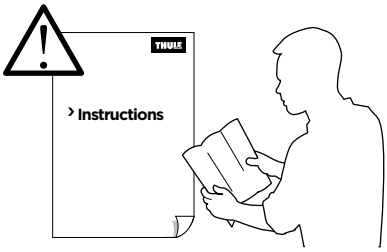

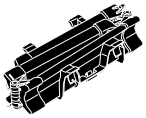

1.2 kg

1

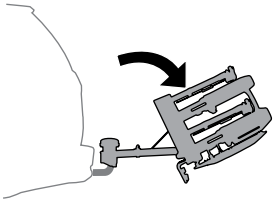

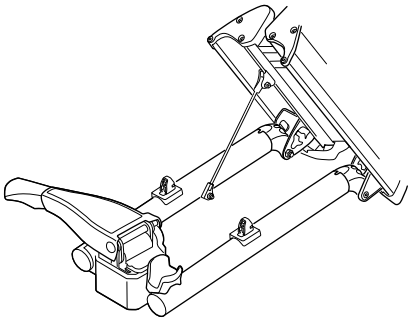

2

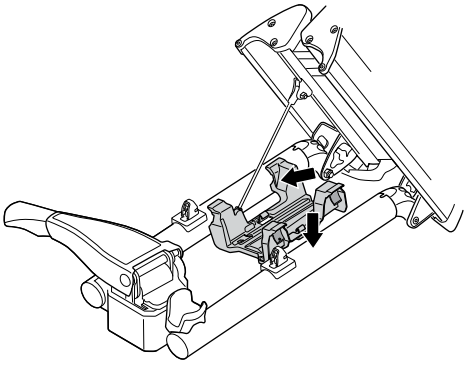

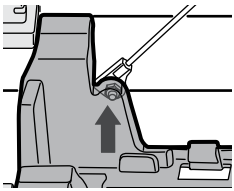

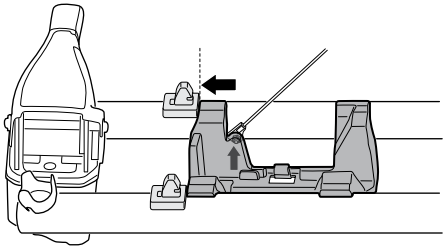

3

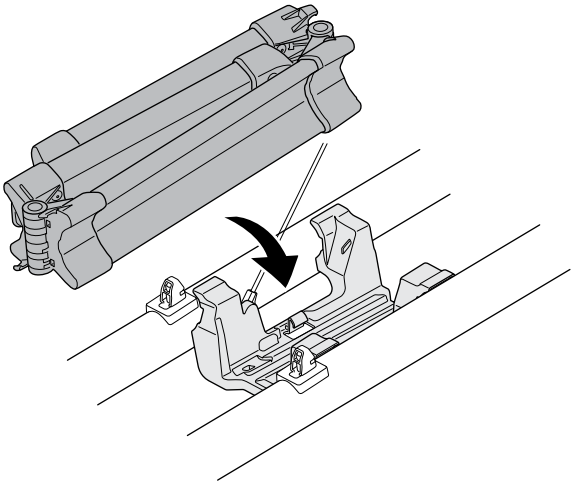

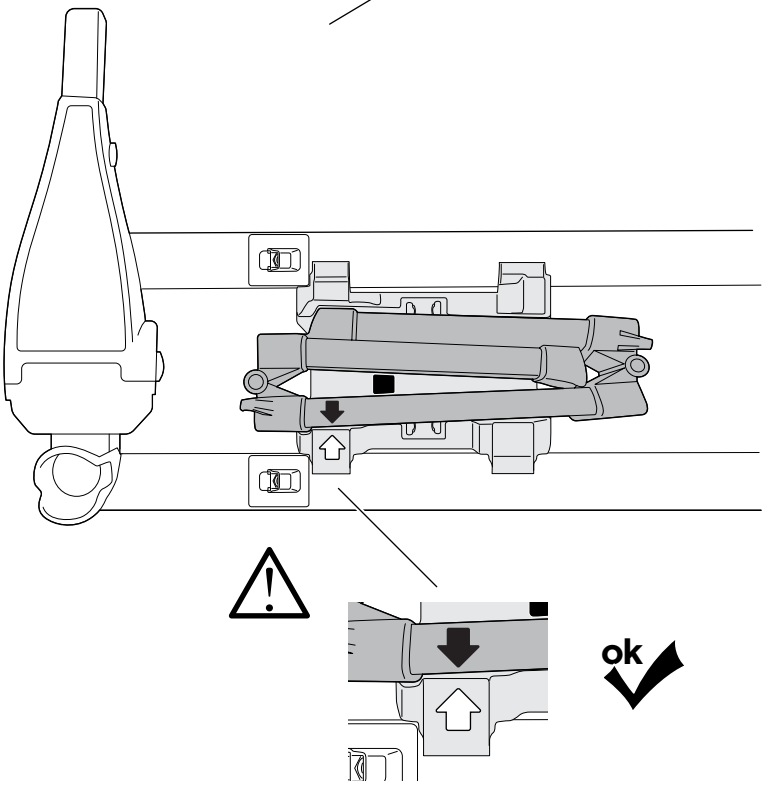

4

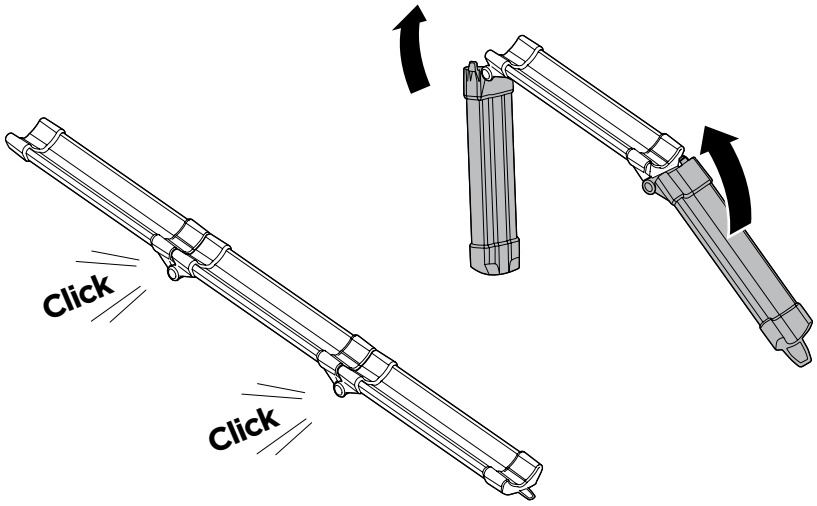

5

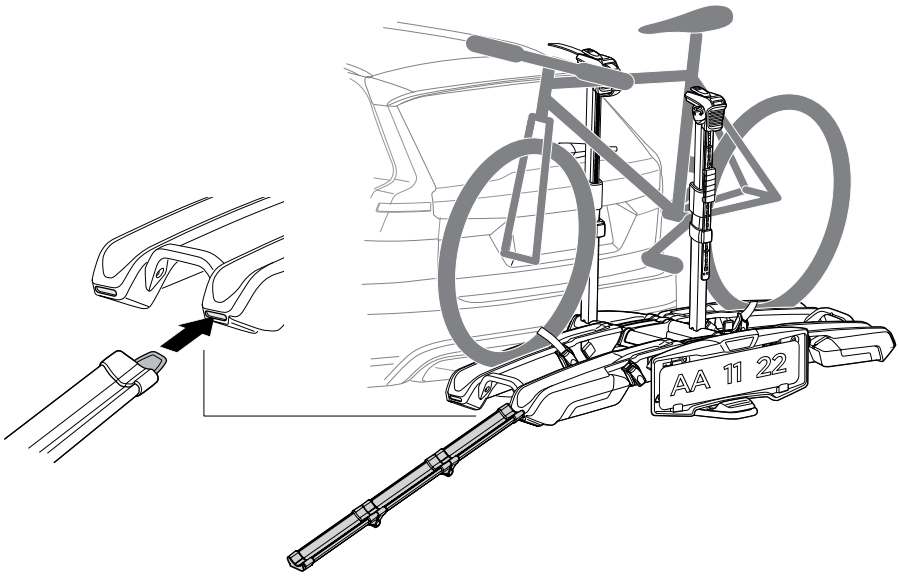

6

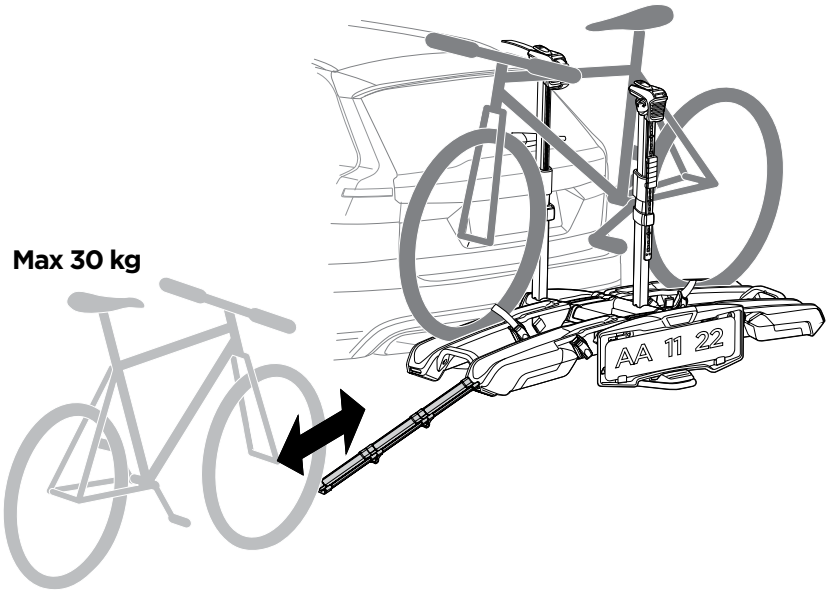

7

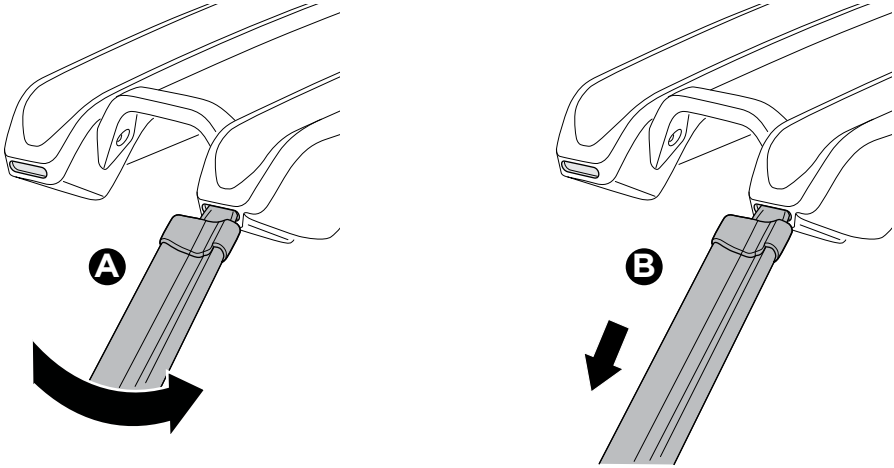

8

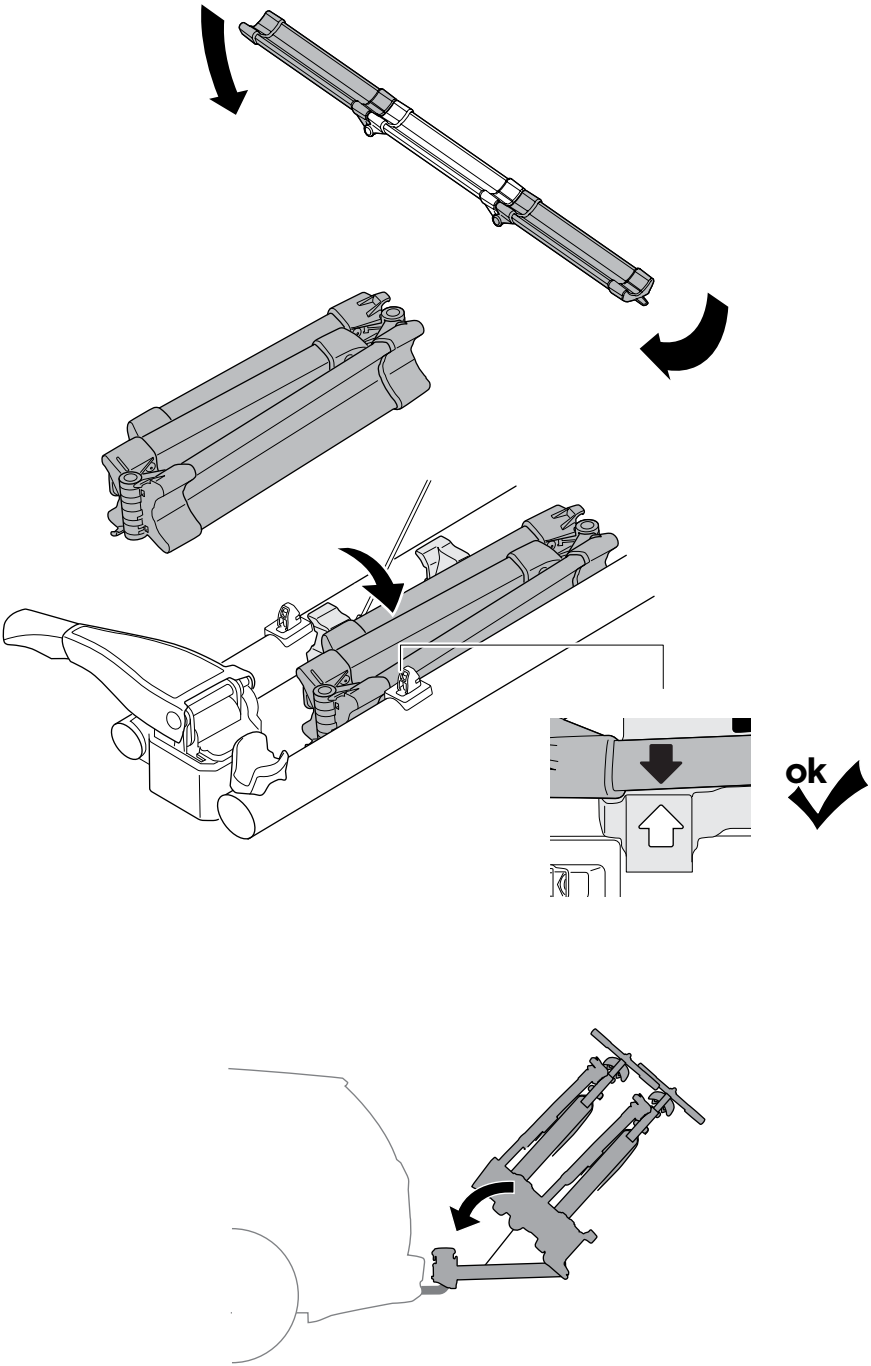

Thule Sweden AB
Borggatan 5
335 73 Hillerstorp, Sweden
info@thule.com
www.thule.com

© Thule Group Nov 2022. All rights reserved.

PART OF THULE GROUP
5562237001