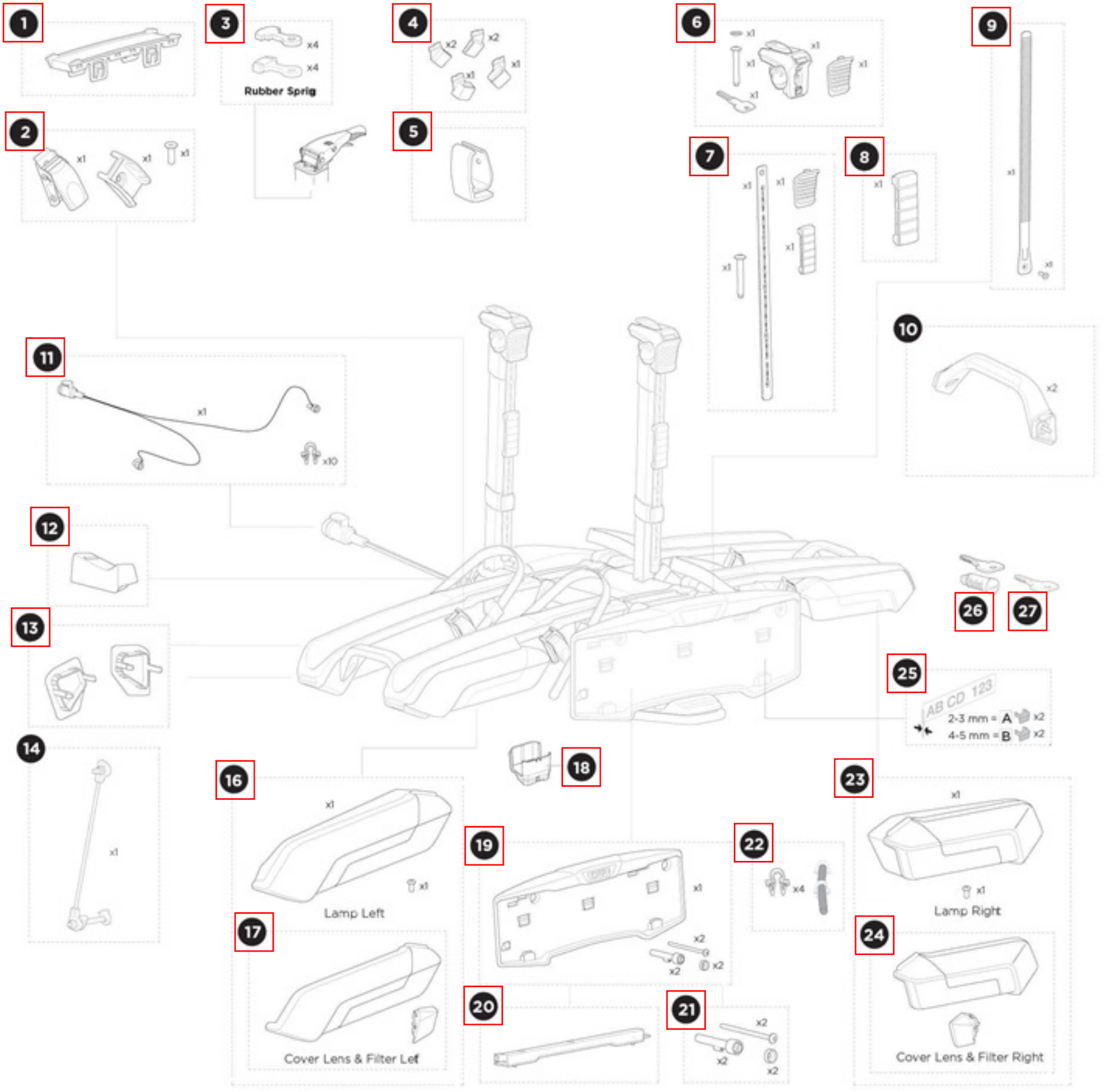
1
2
x1
x1
x1
3
x4
x4
Rubber Sprig
4
x2
x2
x1
x1
5
6
x1
x1
x1
x1
7
x1
x1
x1
x1
8
x1
9
x1
x1
10
x2
11
x1
x10
12
13
14
x1
16
x1
x1
Lamp Left
17
Cover Lens & Filter Lef
18
19
x1
x2
x2
x2
20
21
x2
x2
x2
22
x4
23
x1
x1
Lamp Right
24
Cover Lens & Filter Right
25
AB CD 123
2-3 mm = A x2
4-5 mm = B x2
26
27

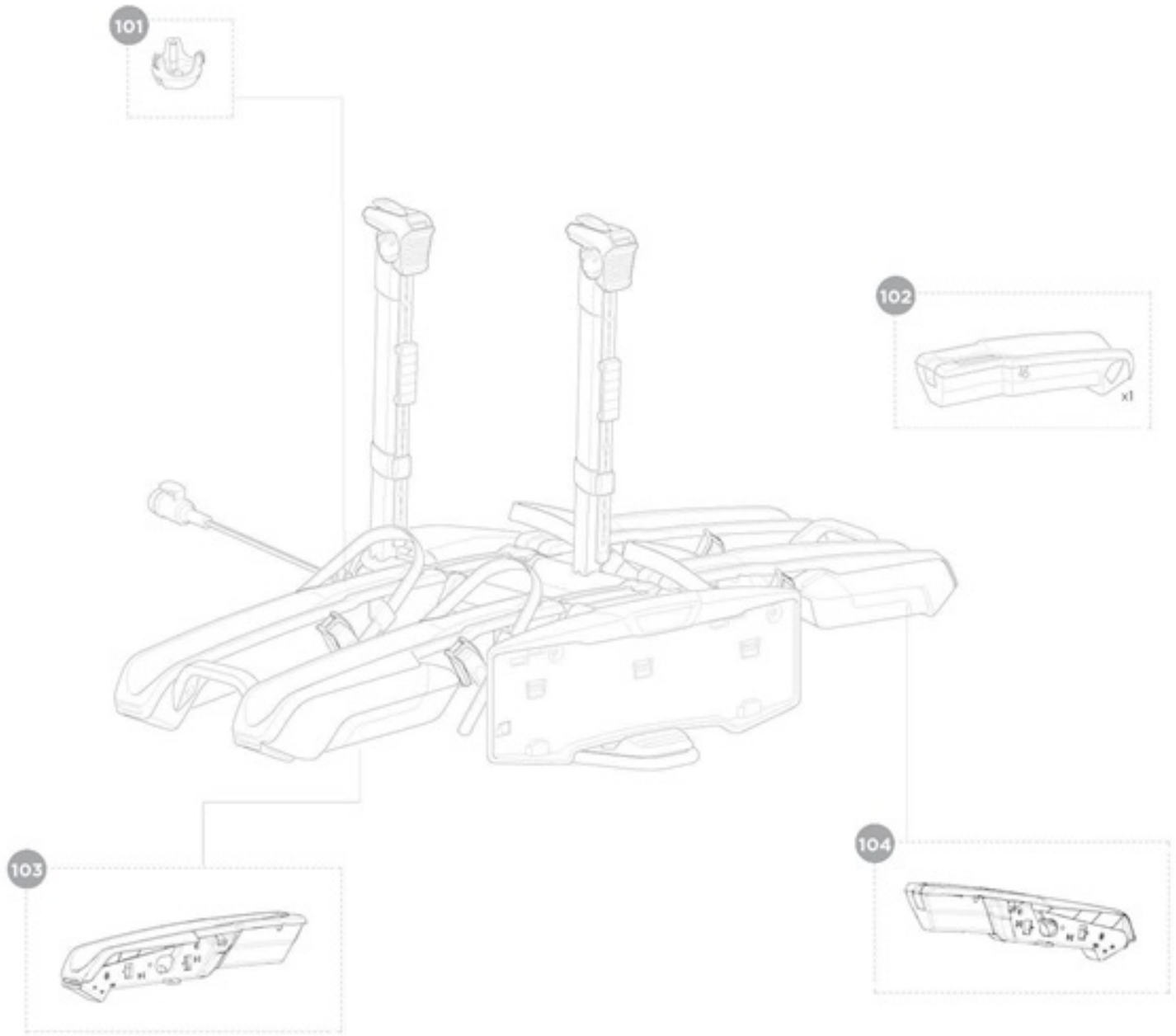
101
102
x1
103
104

Alkatrész	SKU
1. End Cap Baseplate	1500054991
2. Pump buckle	1500054992
3. Rubber spring kit	1500054185
4. Wheel strap parking case kit	1500054994
5. Bike Arm Strap Clip	1500054995
6. Bike arm head	1500054996
7. Bike Attachment Kit	1500054997
8. Strap sleeve	1500054998
9. Wheel strap	1500054993
10. Wheel tray handle	1500055088
11. Lamp cable	1500055010
12. Spacer adapter - Thule Epos	1500055019
13. End cap kit	1500055003
14. Tilt wire 2-bike	1500055091
16. Lamp left	1500055004
17. Cover lens & filters left	1500055015
18. Housing foot	1500052631
19. Number plate holder kit	1500054999
20. Lamp license plate	1500055018
21. Number plate holder pins	1500055030
22. Cable clip	1500052540
23. Lamp right	1500055005
24. Cover lens & filters right	1500055026
25. Replacement clips	1500052598
26. Lock Cylinder	Go to "Keys & Locks"
27. Key	Go to "Keys & Locks"
101. Electrical connector holder	1500055093
102. Wheel tray cover - universal	1500055085
103. Wheel tray cover (VI) - last L	1500055086
104. Wheel tray cover (VI) - last R	1500055087