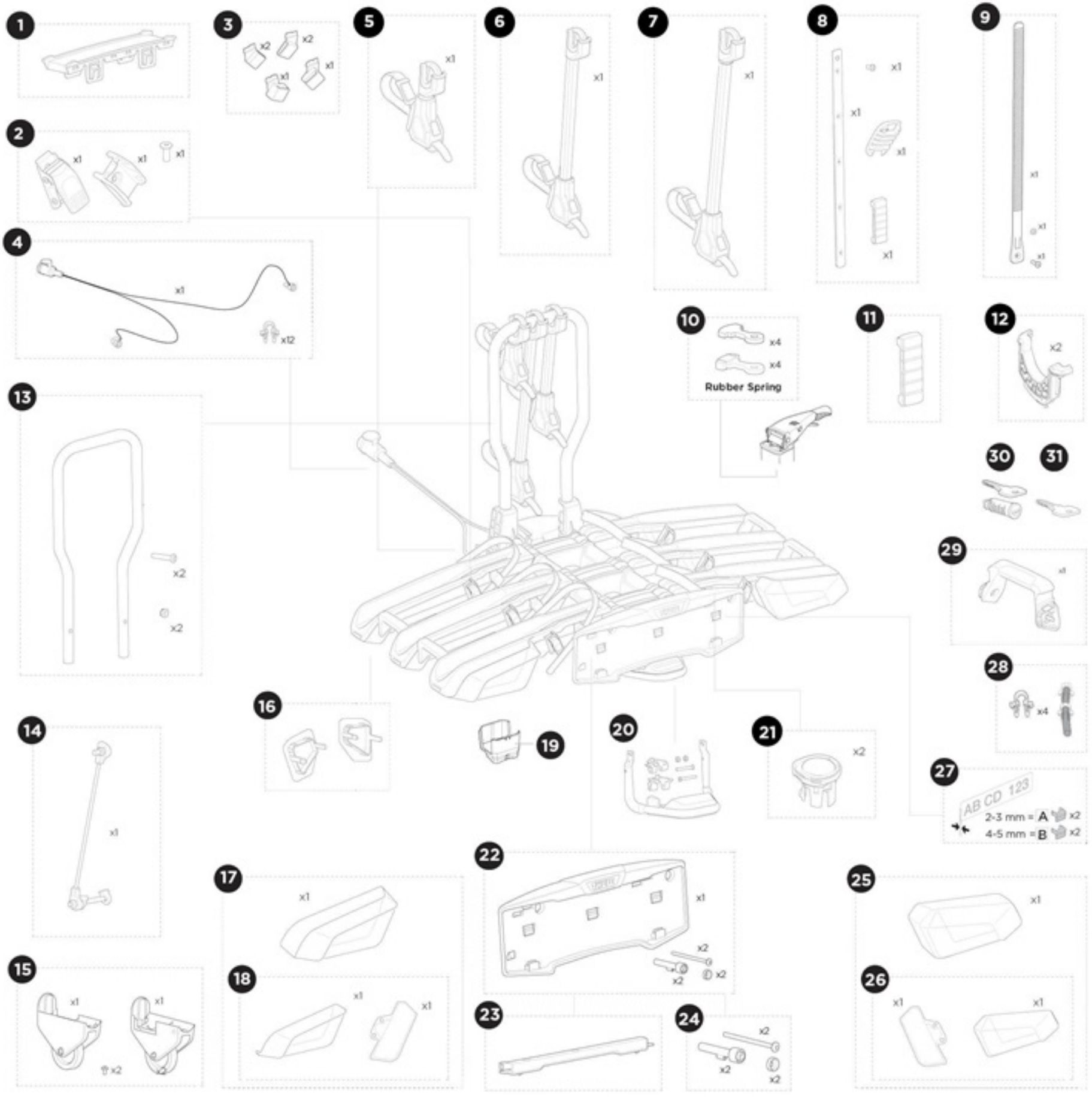
1
2
x1
x1
x1
3
x2
x2
x1
x1
4
x1
x12
5
x1
6
x1
7
x1
8
x1
x1
x1
x1
9
x1
x1
x1
10
x4
x4
Rubber Spring
11
12
x2
13
x2
x2
14
x1
15
x1
x1
x2
x2
16
17
x1
18
x1
x1
19
20
21
x2
22
x1
x2
x2
x2
23
24
x2
x2
x2
25
x1
26
x1
x1
27
AB CD 123
2-3 mm = A x2
4-5 mm = B x2
28
x4
29
x1
30
31

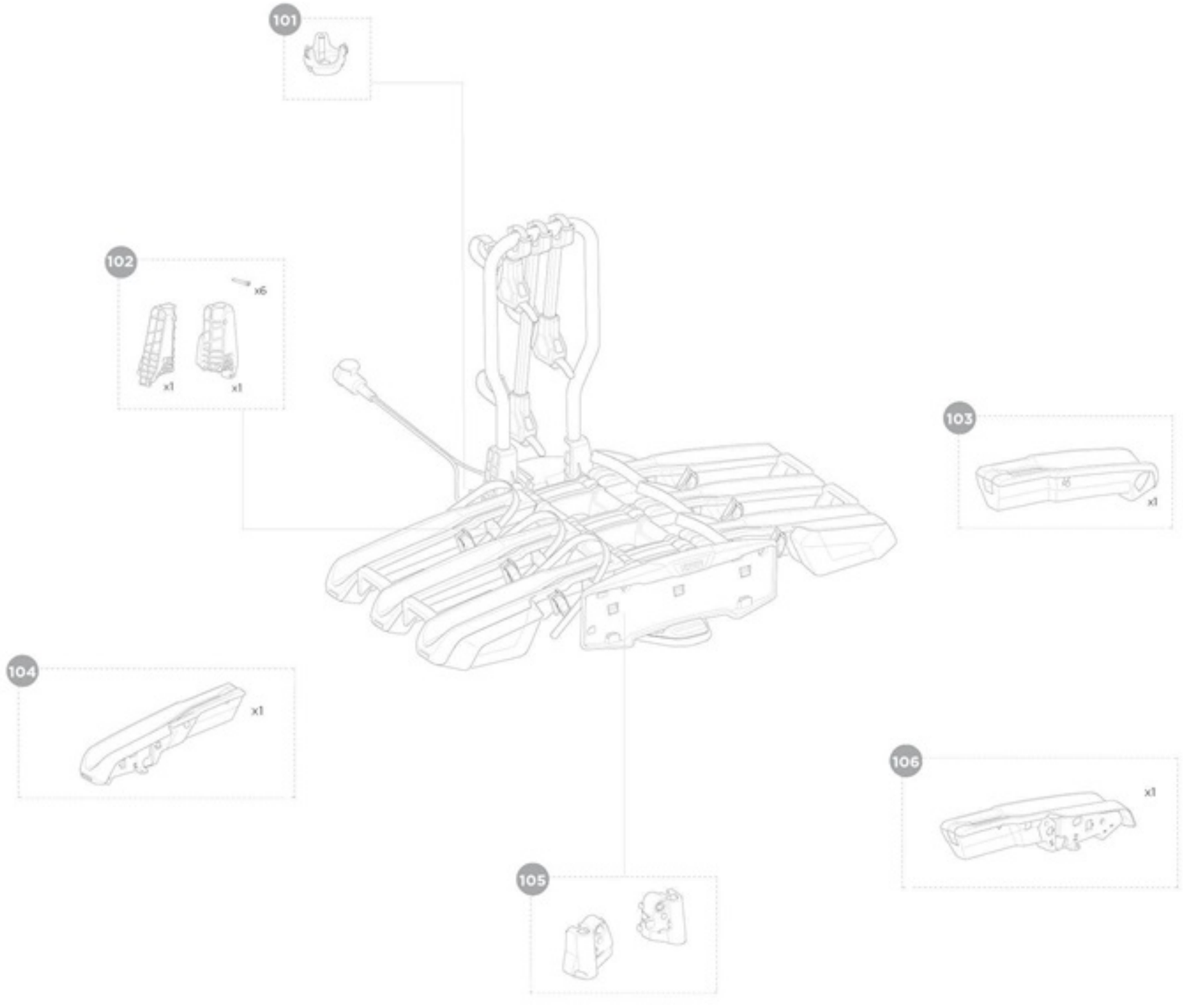
101
102
x6
x1
x1
103
x1
104
x1
105
106
x1

Alkatrész	SKU
1. End Cap Baseplate	1500054991
2. Pump buckle	1500054992
3. Wheel strap parking case kit	1500054994
4. Lamp cable	1500055011
5. Bike arm 122 mm	1500055283
6. Bike arm 312 mm	1500055284
7. Bike arm 502 mm	1500055286
8. Bike arm attachment kit	1500055288
9. Wheel strap	1500054993
10. Rubber spring kit	1500054185
11. Strap sleeve	1500054998
12. Bike arm pad claw kit	1500055287
13. U-frame with bike arm guide	1500055289
14. Tilt wire 3-bike	1500055099
15. Wheel kit	1500055002
16. End cap kit	1500055003
17. Lamp Left Midipoint VII LHD	1500055277
18. Lens and filter Left, VII	1500055281
19. Housing foot	1500052631
20. Tilt pedal	1500055089
21. Cap adapter	1500055290
22. Number plate holder kit	1500054999
23. Lamp license plate	1500055018
24. Number plate holder pins	1500055030
25. Lamp Right Midipoint VII LHD	1500055278
26. Lens and filter Right, VII	1500055282
27. Replacement clips	1500052598
28. Cable Clip Set t+3,5mm	1500055017
29. Wheel tray handle	1500055096
30. Lock Cylinder	Go to "Keys & Locks"
31. Key	Go to "Keys & Locks"
101. Electrical connector holder	1500055093
102. Consoles left & right	1500055097
103. Wheel tray cover - universal	1500055085
104. Wheel tray cover (VII) - last position left	1500055094
105. End caps front + Wing cam lock	1500055098
106. Wheel tray cover (VII) - last position right	1500055095