› Instructions

Thule Excellent - 3rd Rail Kit

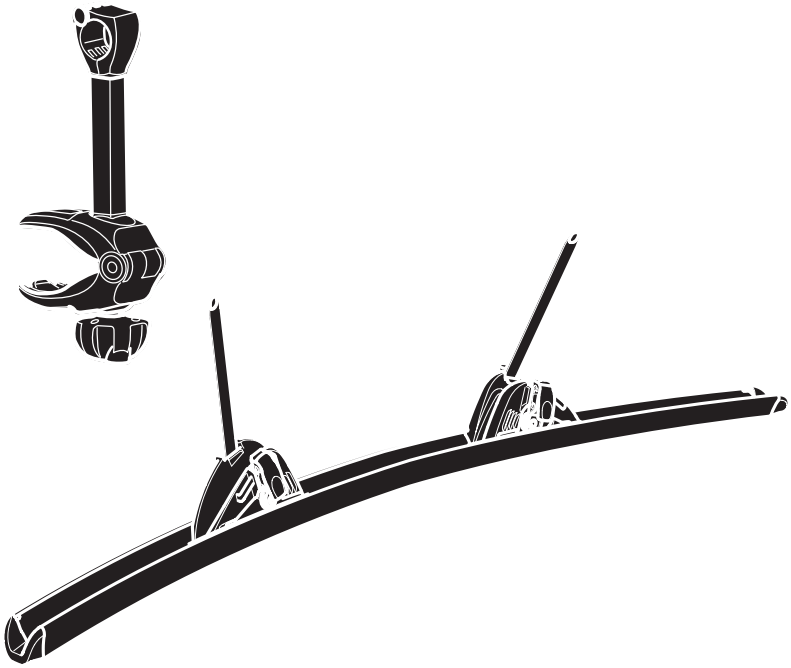

Prod no.: 309823-302034
Doc. no.: EX903-04 / 501-7693-04
Date: 29/10/2019

Bring your life
thule.com

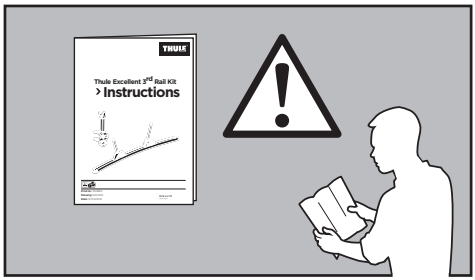
THULE
Thule Excellent 3rd Rail Kit
› Instructions

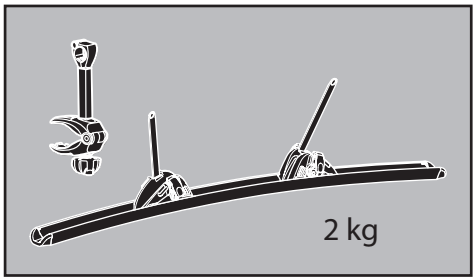
2 kg

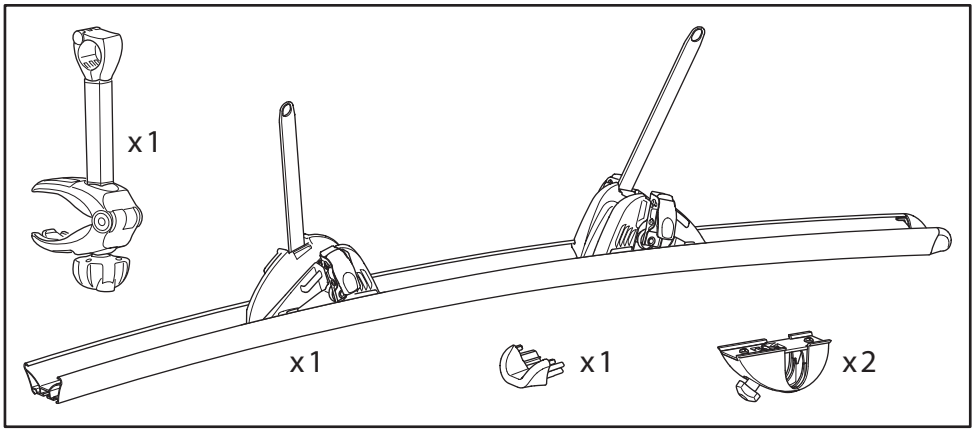
x 1
x 1
x 1
x 2

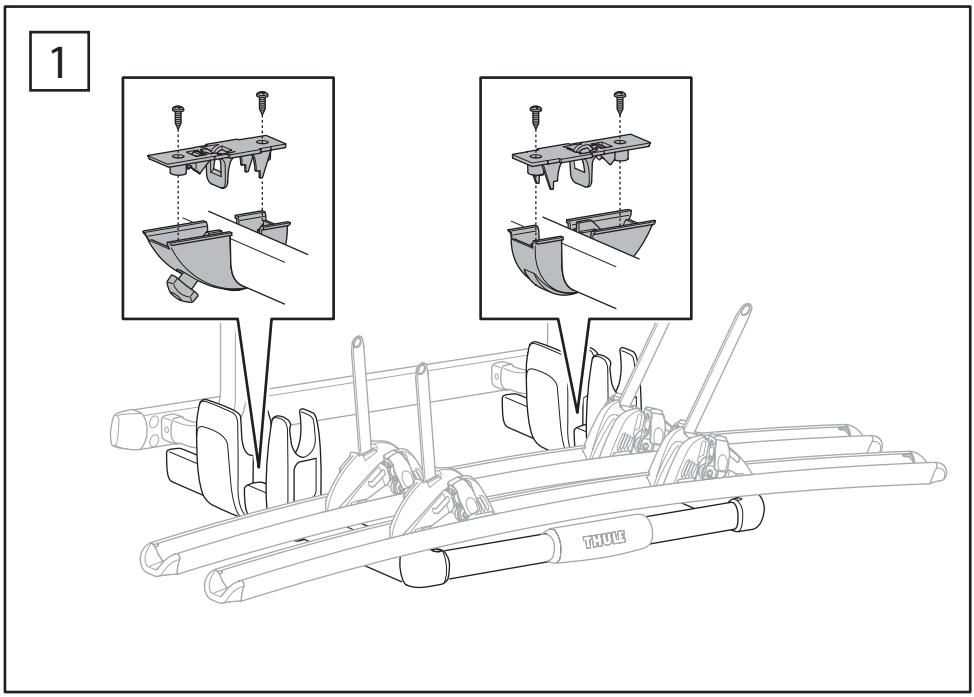
1
THULE

2

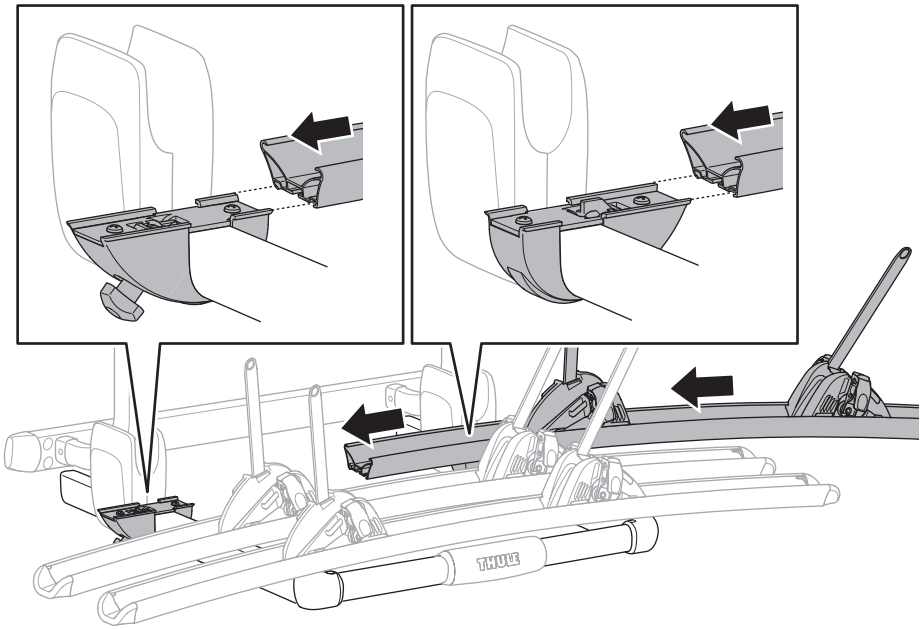

3

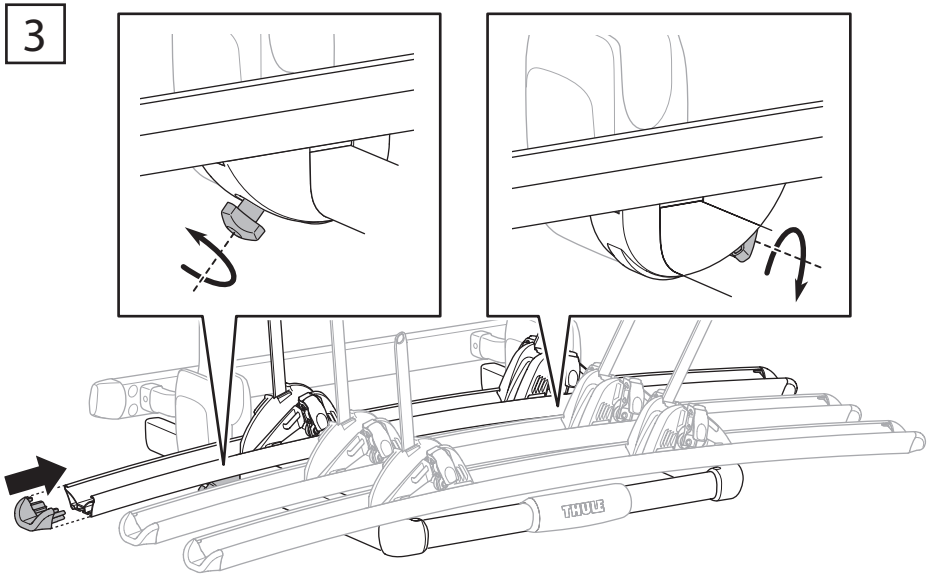

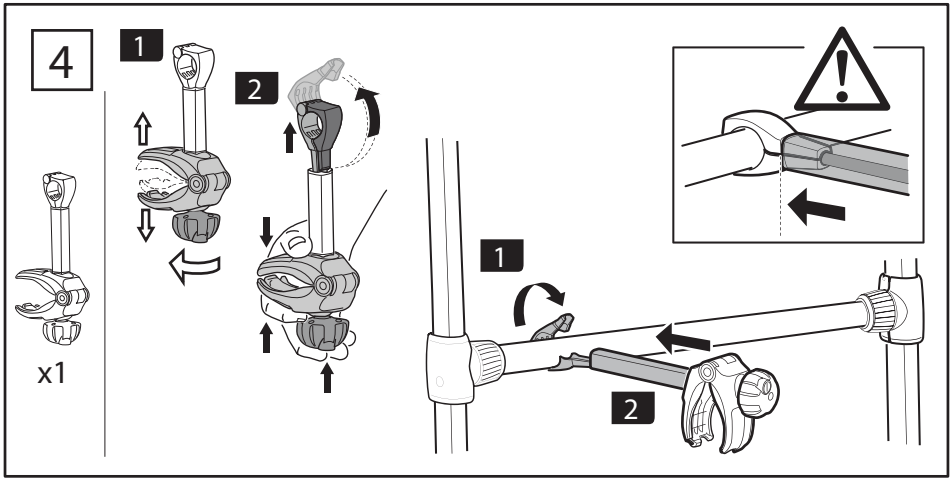

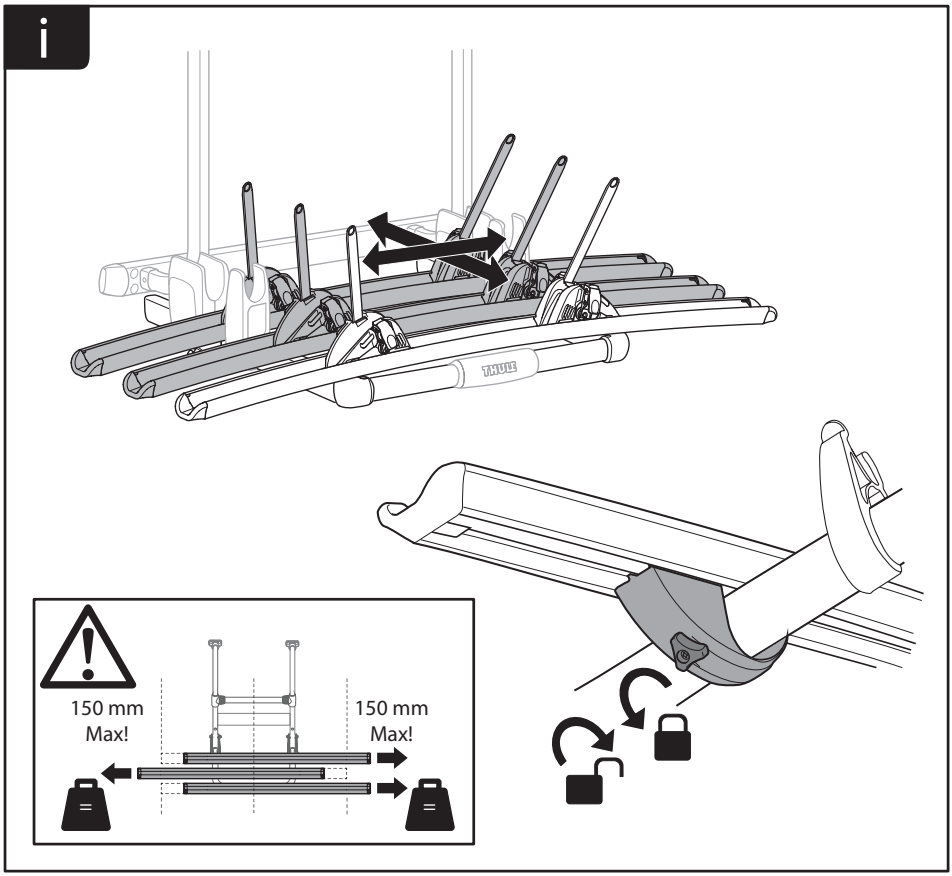

EX903-04 501-7693-04

Thule NV, Kortrijkstraat 343 – BE 8930 Menen, BELGIUM
infoRV @ thule.com
www.thule.com