Thule Lift V16 3rd Rail Kit

› Instructions

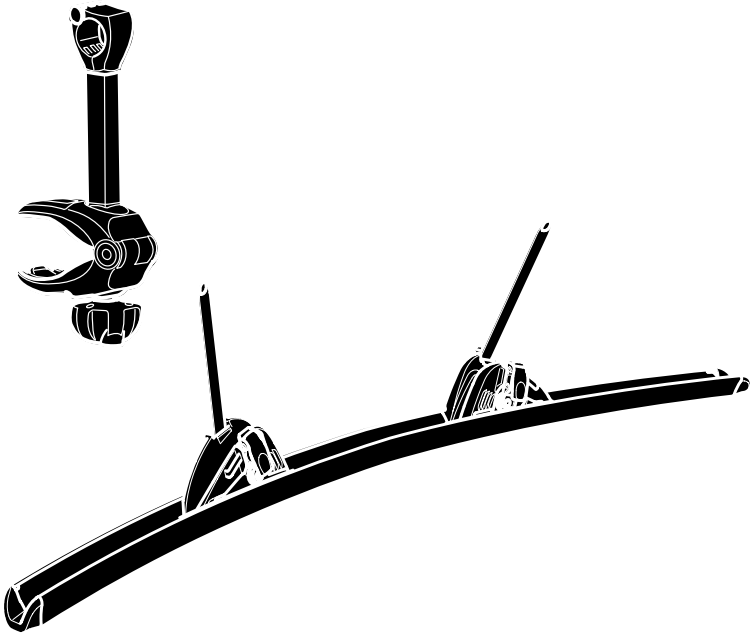

Prod no.: 307370
Document: OBL907-01 501-8203-01
Date: 23/03/2016

Bring your life
thule.com

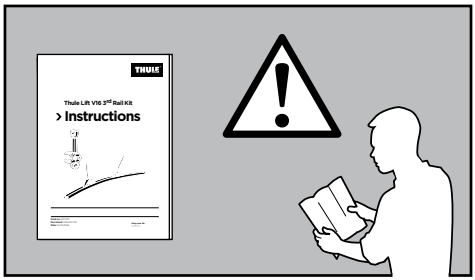
THULE
Thule Lift V16 3rd Rail Kit
› Instructions

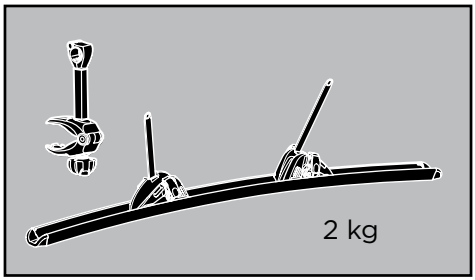
2 kg

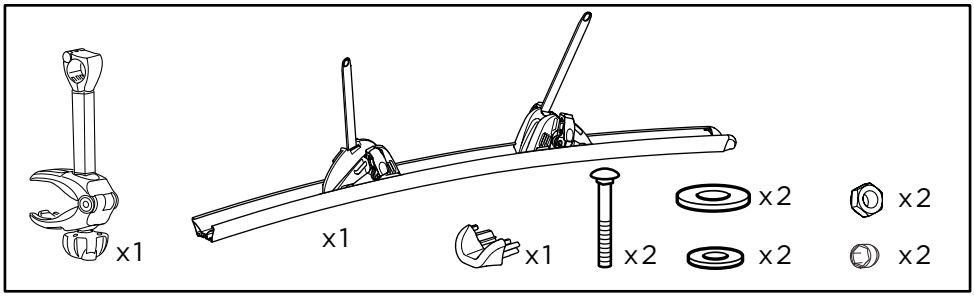
x1
x1
x1
x2
x2
x2
x2
x2

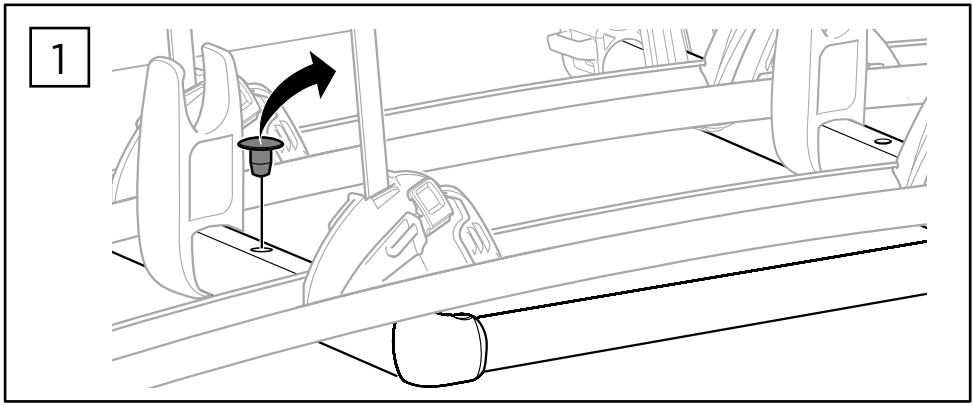
1

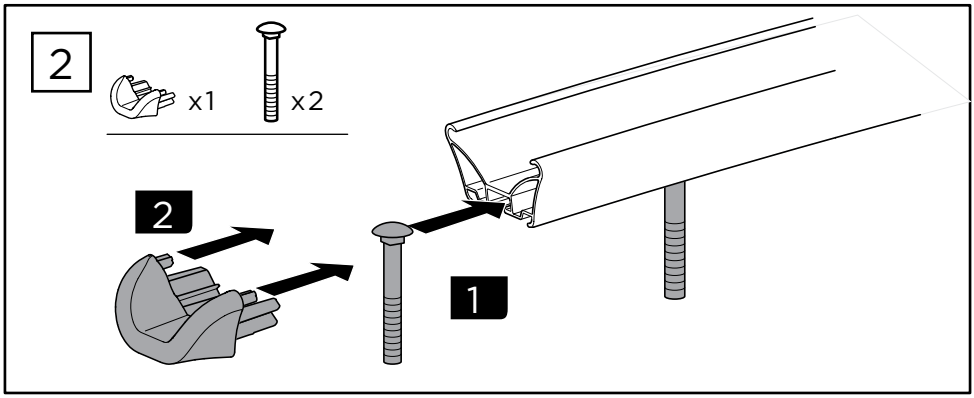
2
x1
x2
2
1

3

x2 x2 x2 x2

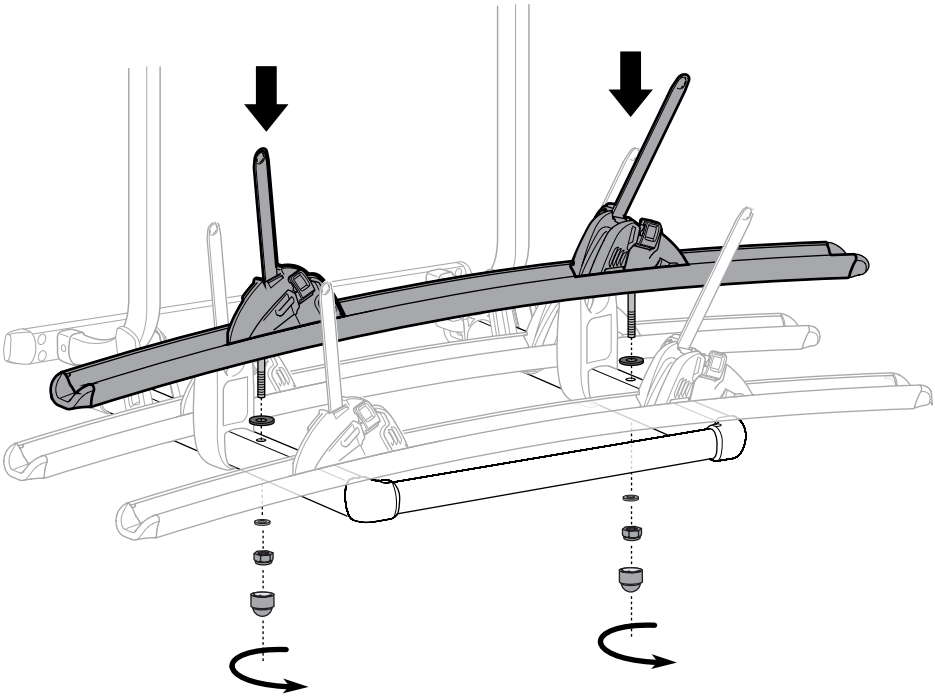

4

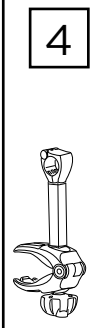

x1

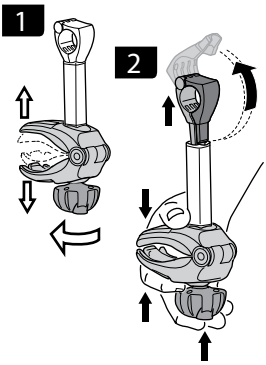

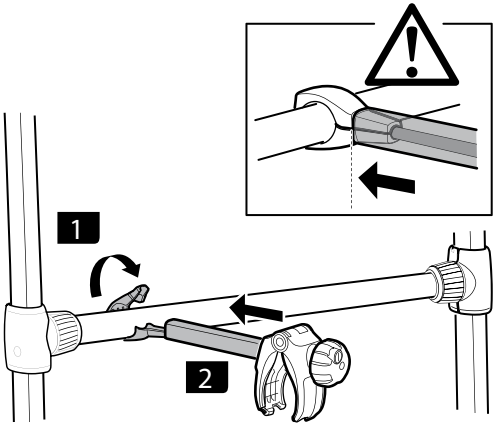

Thule NV, Kortrijkstraat 343 – BE 8930 Menen, BELGIUM
infoRV@thule.com
www.thule.com

501-8203-01