› Instructions

Thule Loading Ramp XT

9172



THULE.COM

Bring your life
thule.com

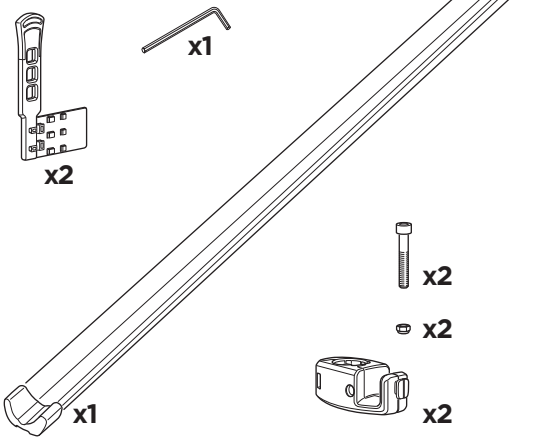

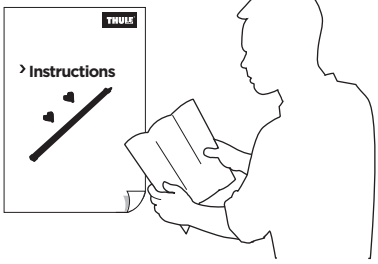

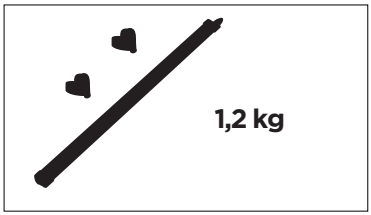

1

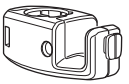

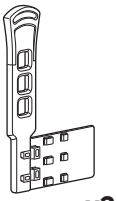

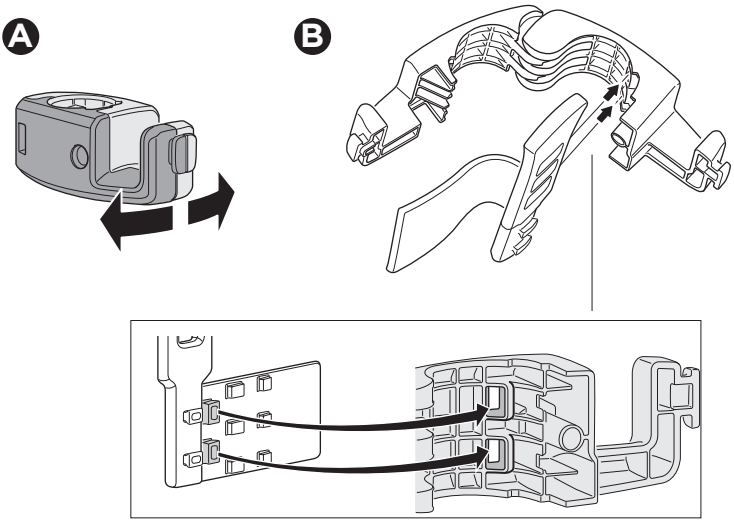

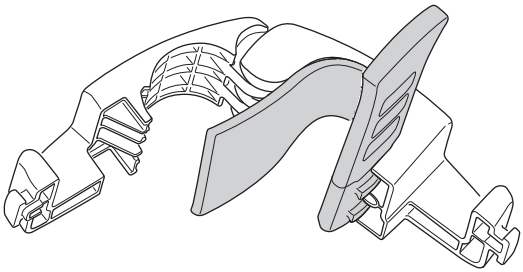

2

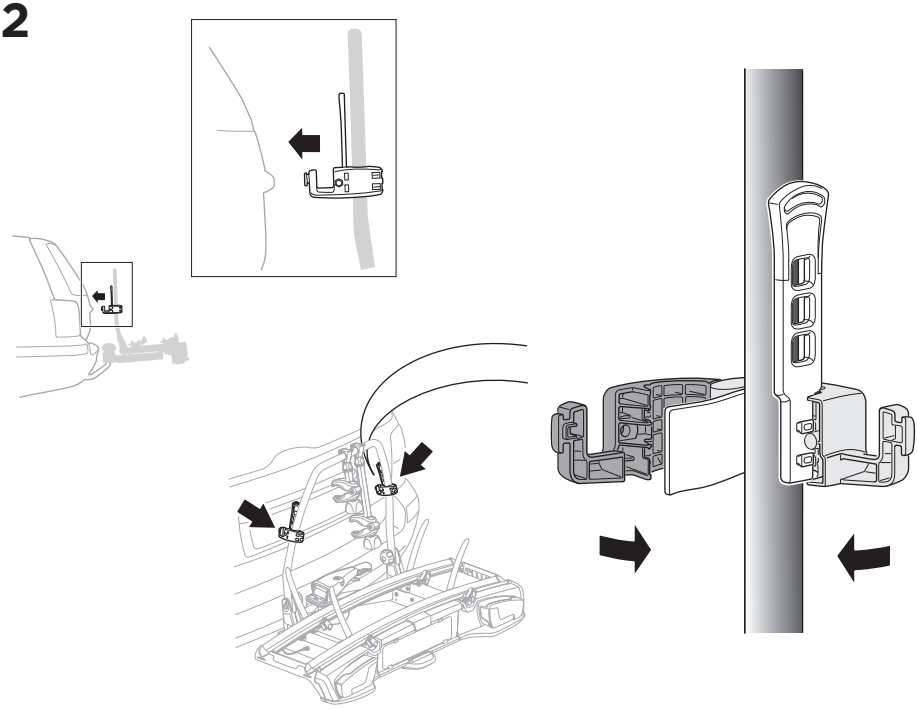

3







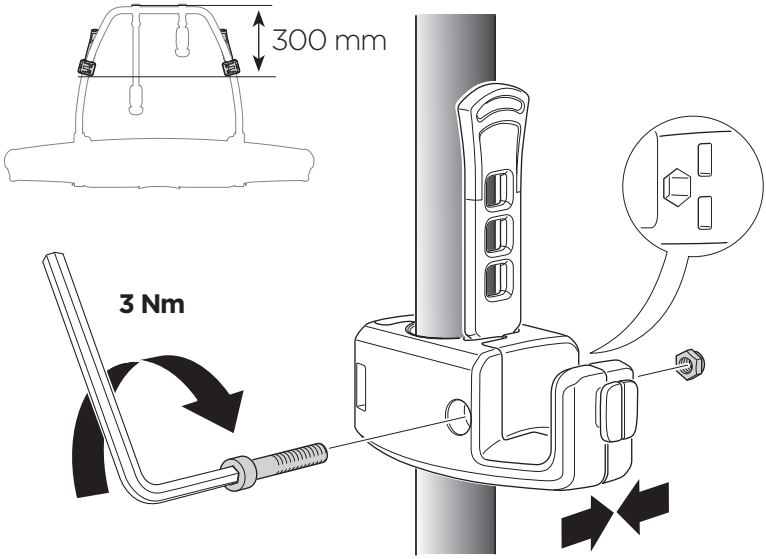

4

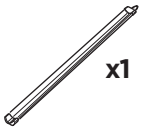

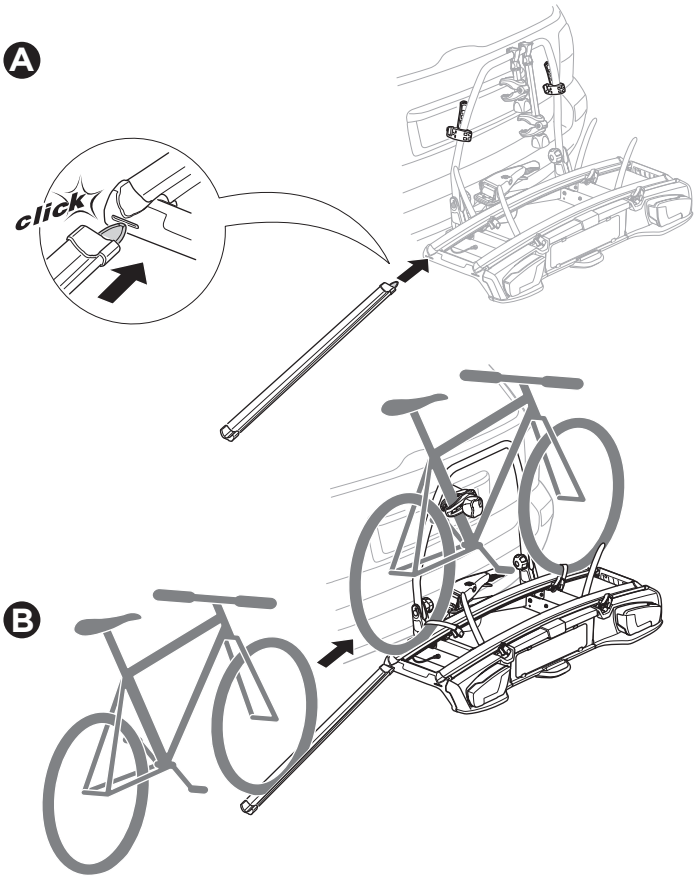

5

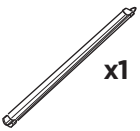

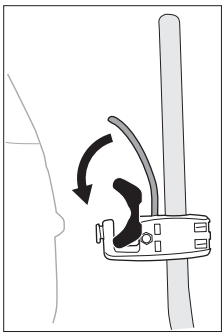

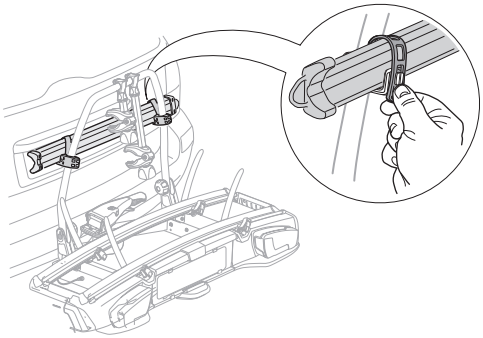

Thule Sweden AB, Borggatan 5
335 73 Hillerstorp, SWEDEN

info@thule.com

www.thule.com

» PART OF THULE GROUP

© Thule Group 2018. All rights reserved.

501-8084-02