Thule Sport G2 Garage 4th Rail Kit

› Instructions

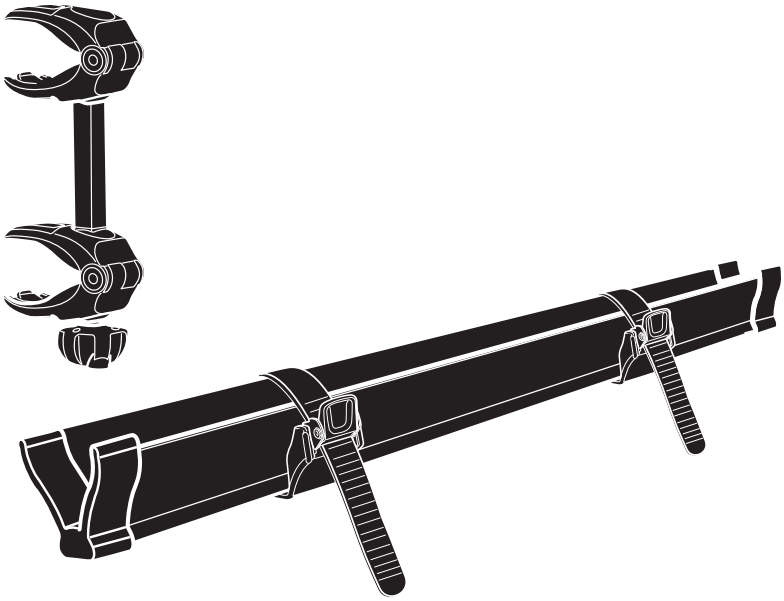

Prod no.: 306578
Document: SP908-01
Date: 08/10/2014

Bring your life
thule.com

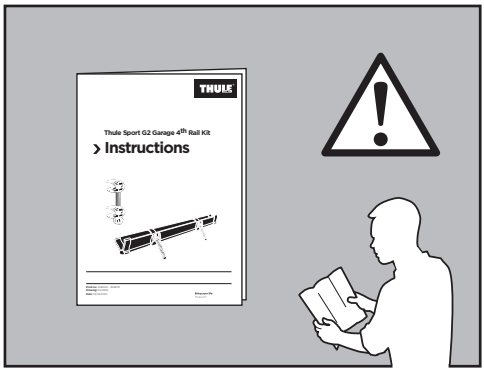
THULE
Thule Sport G2 Garage 4th Rail Kit
› Instructions

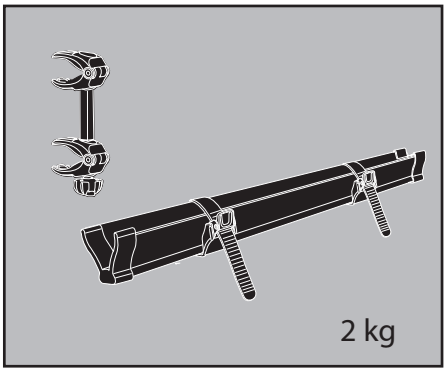
2 kg

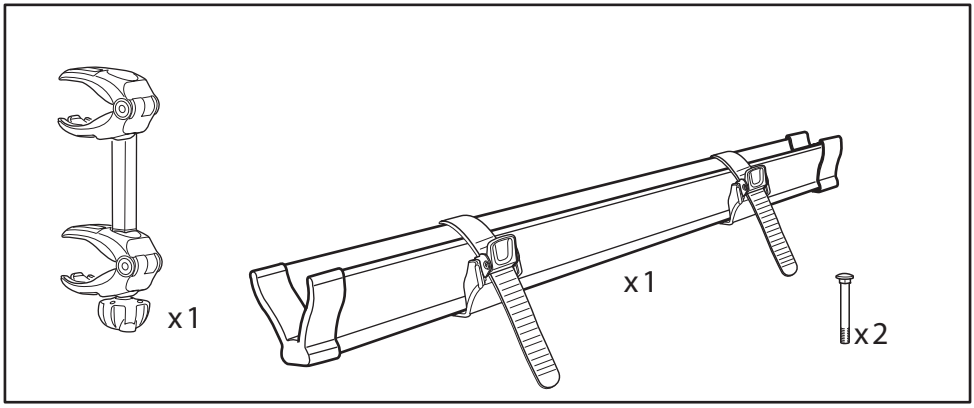
x1
x1
x2

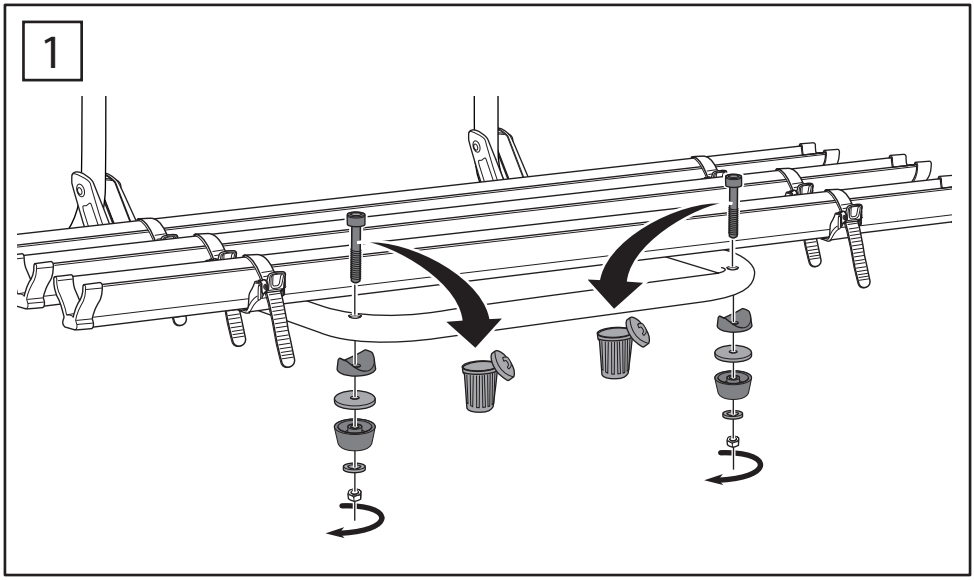
1

2

x2

1

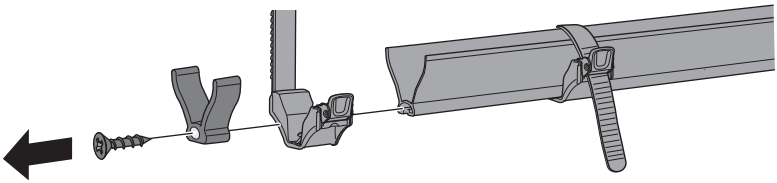

2

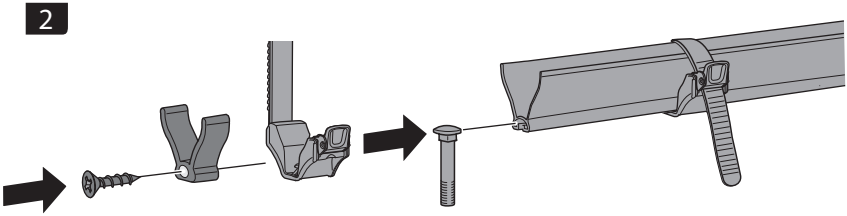

3

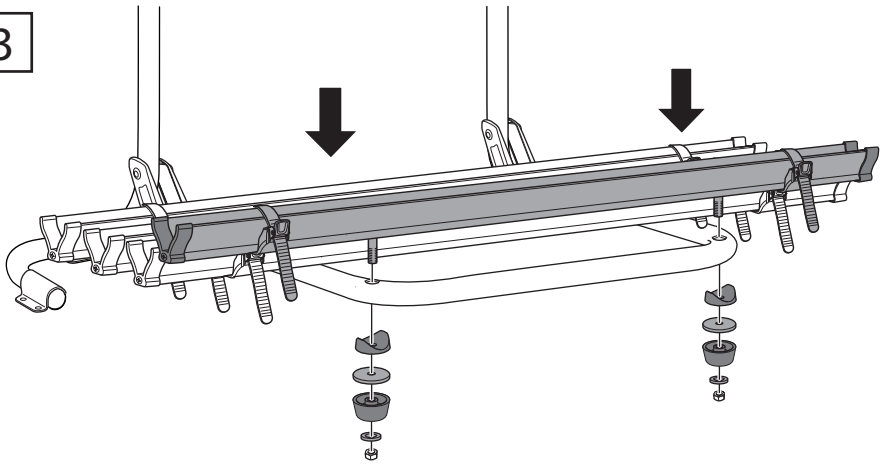

4

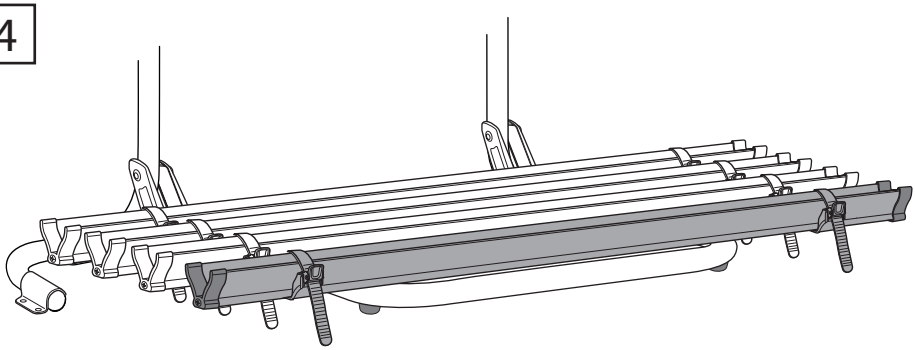

5

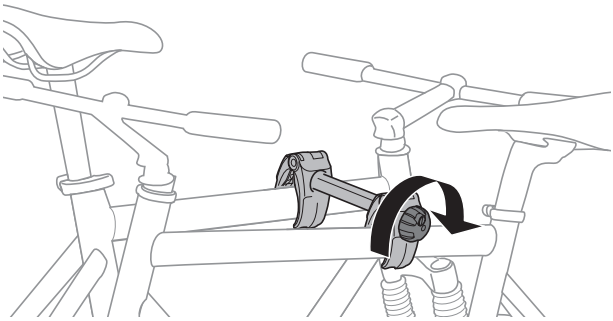

526000 **Abschließbare Knebelmutter**
Locking Knob



538000 **Kabelschloss**
Locking wire



Thule NV, Kortrijkstraat 343 – BE 8930 Menen, BELGIUM
infoRV@thule.com
www.thule.com

501-7829-01