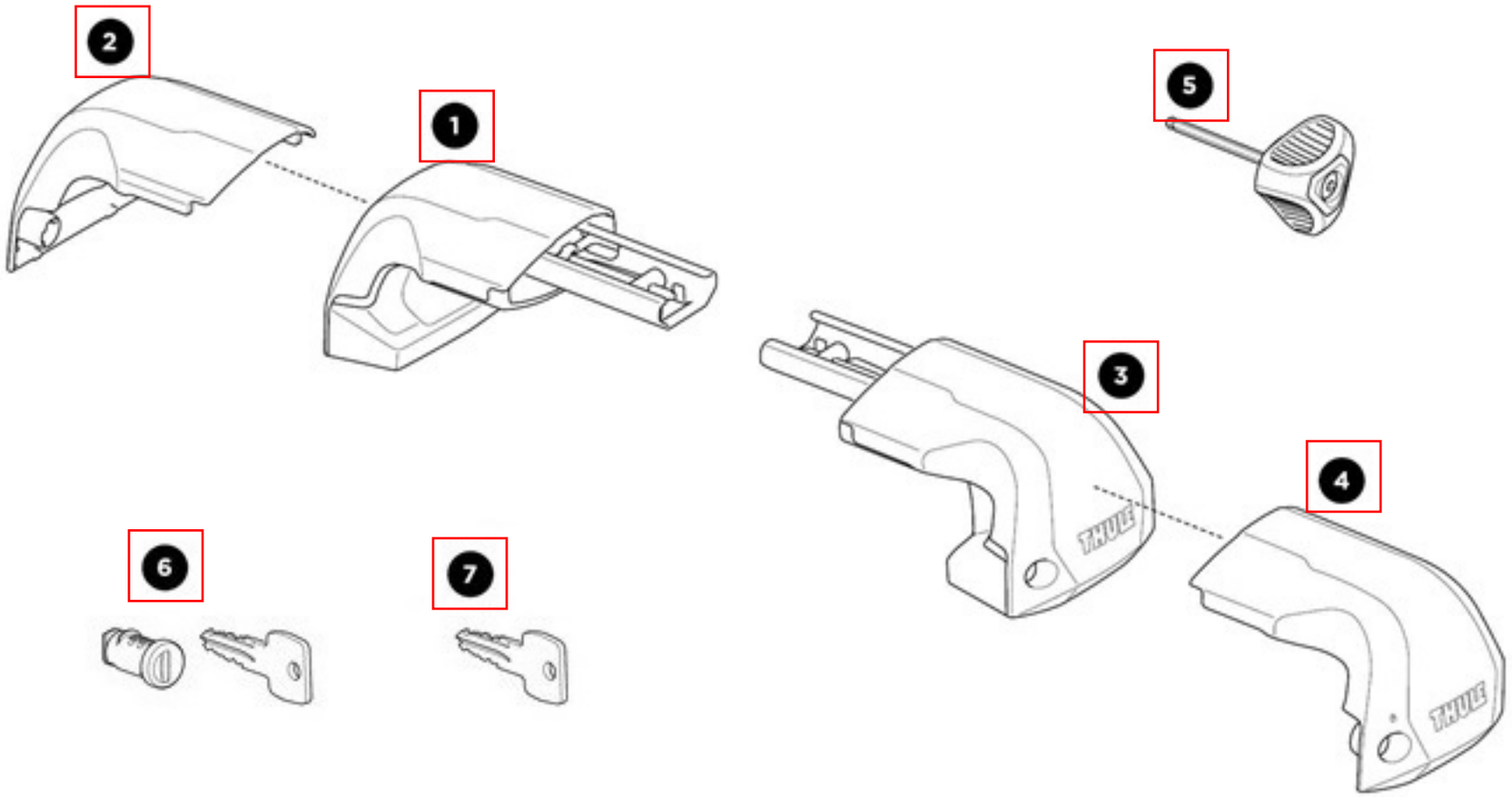
2
1
5
3
4
6
7
THULE
THULE

Alkatrész	SKU
1. Complete Foot Left	1500054734
2. Front Cover Left	1500054735
3. Complete Foot Right	1500054736
4. Front Cover Right	1500054737
5. Torque Key 4Nm	1500052988
6. Lock Cylinder	Go to "Keys & Locks"
7. Key	Go to "Keys & Locks"