THULE SWEDEN

Thule EasyFold XT Loading Ramp

› Instructions

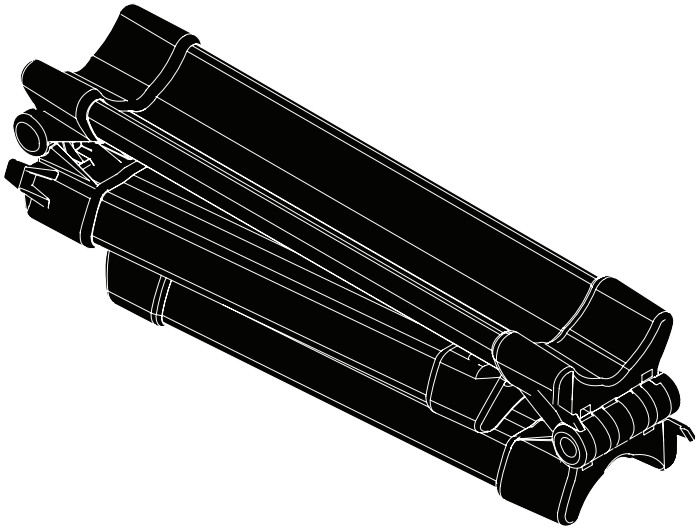

THULE BRING IT! GUARANTEE
THULE.COM



1,3 kg

933400

C.20161024
501-8187-03

Bring your life
thule.com

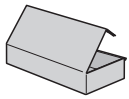

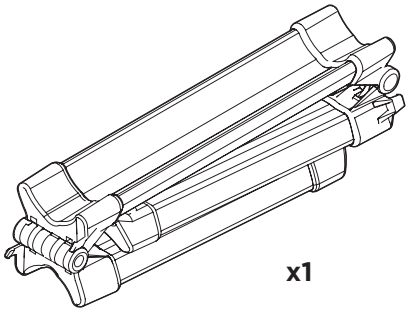

x1

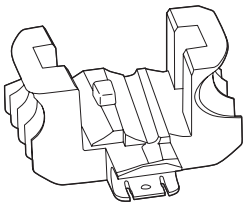

x1

1

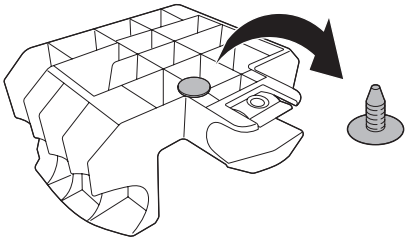

2

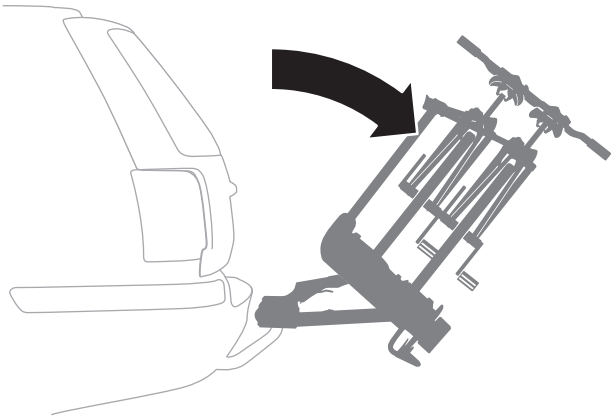

3

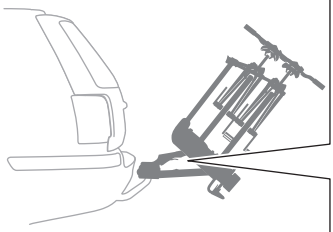

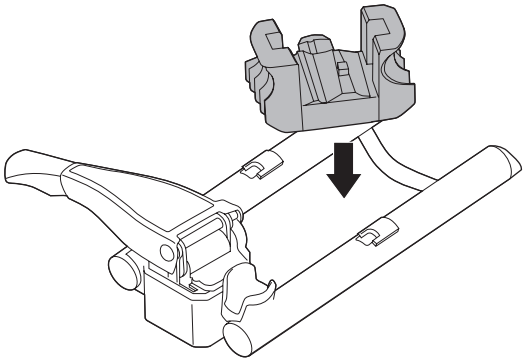

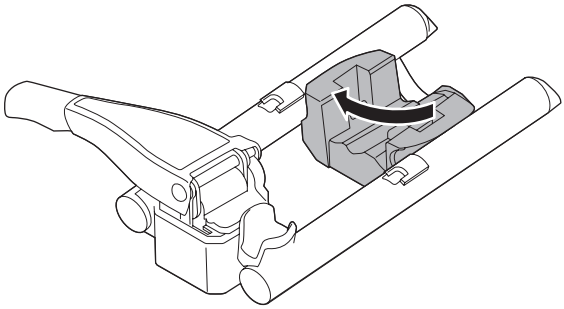

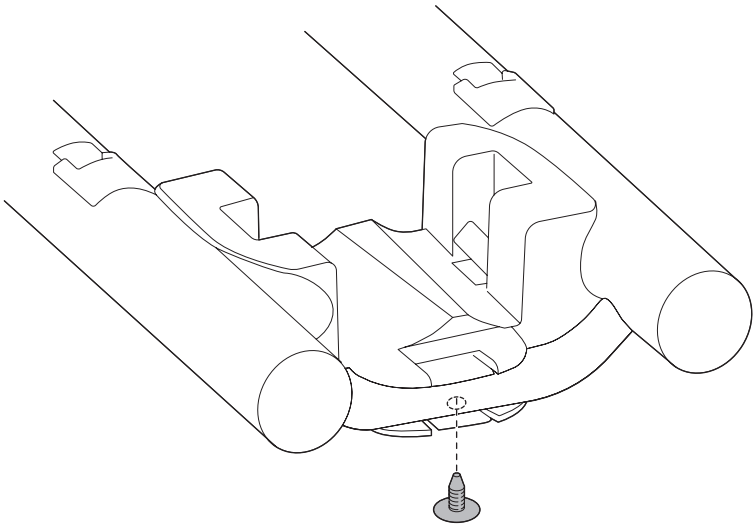

4

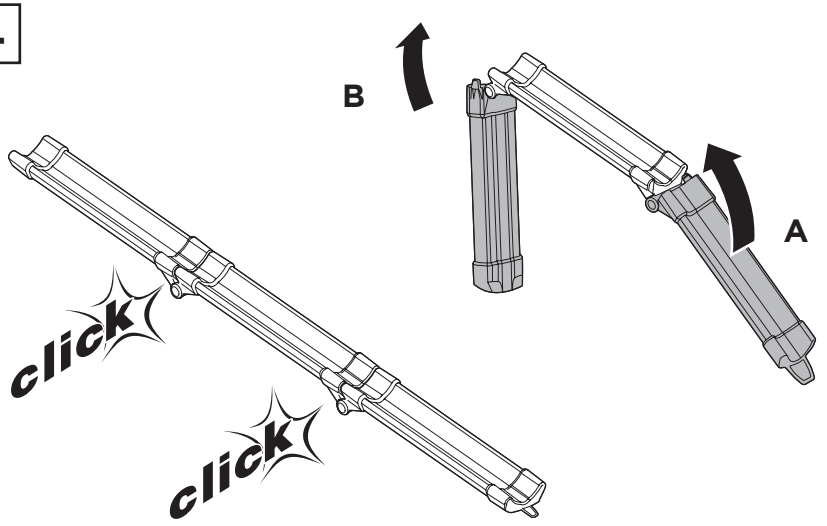

5

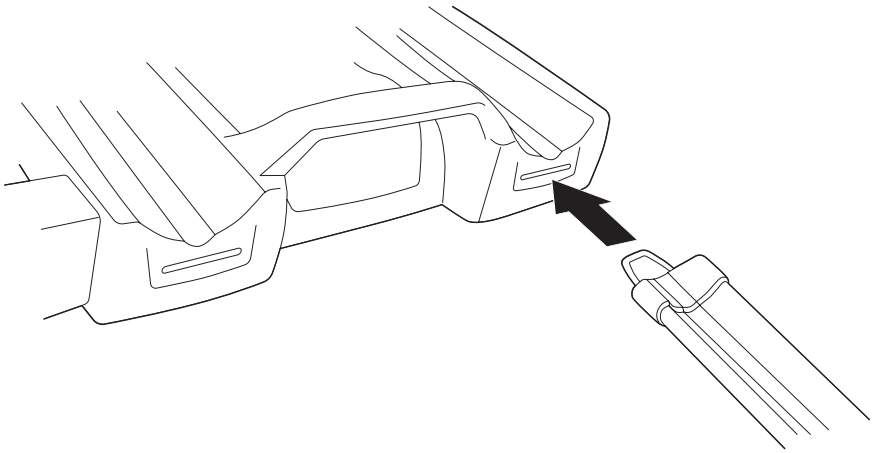

6

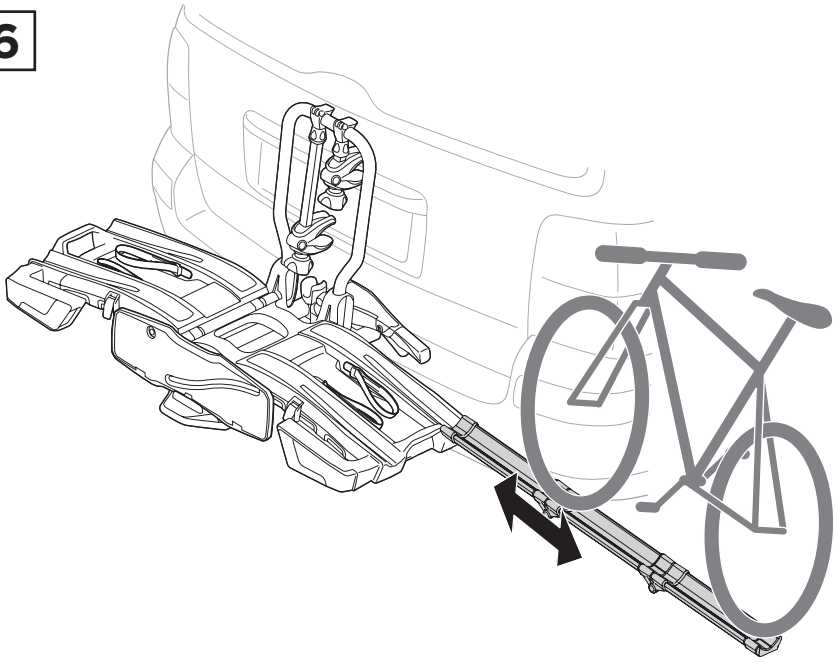

7

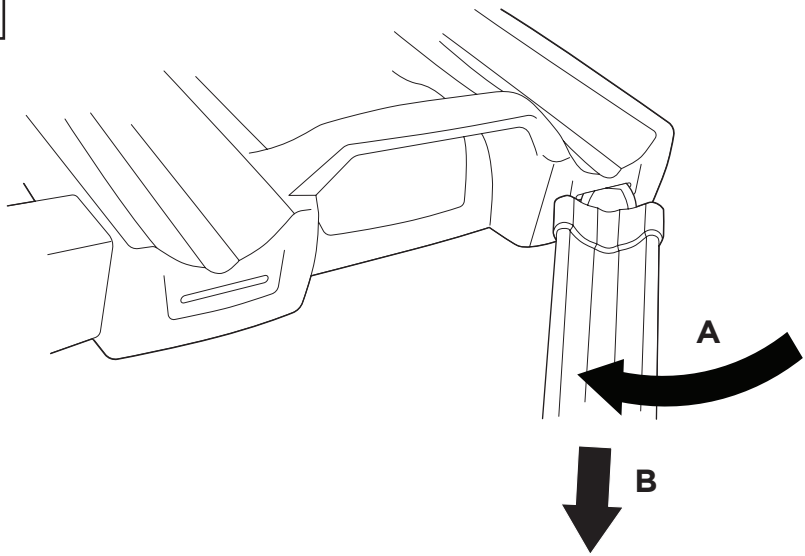

8

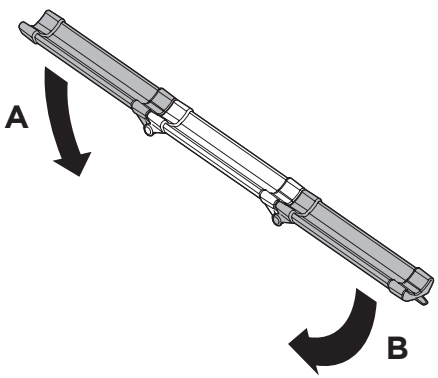

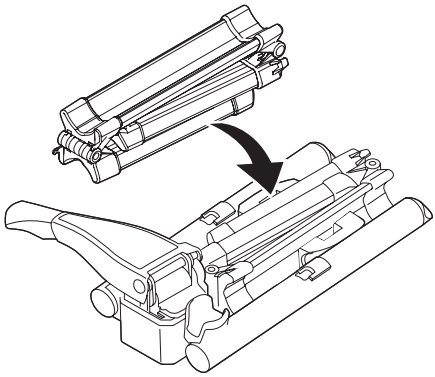

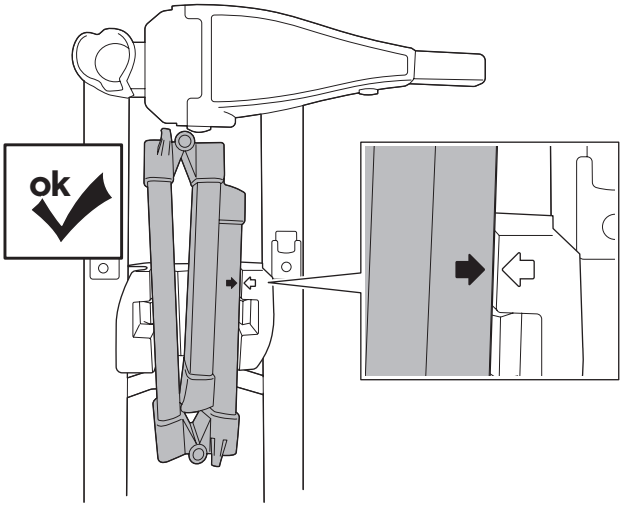

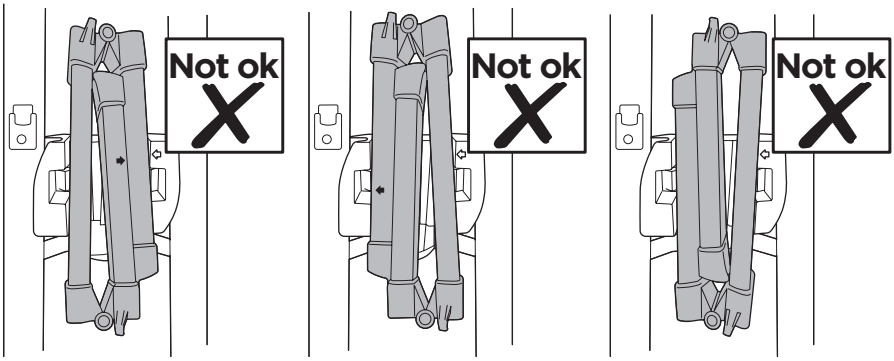

9

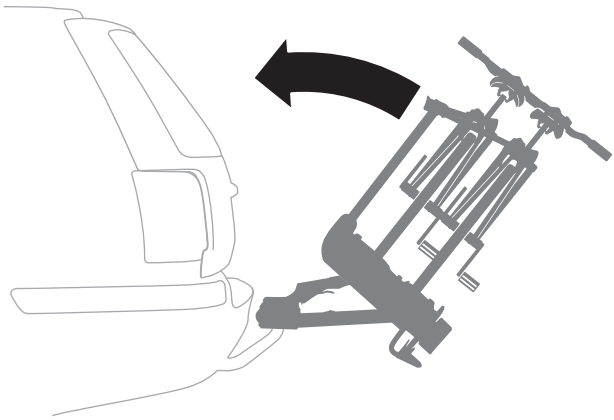

Thule Sweden AB, Box 69, 330 33 Hillerstorp, SWEDEN
info@thule.com
www.thule.com
» PART OF THULE GROUP
© Thule Group 2016. All rights reserved.
501-8187-03