THULE SWEDEN

SquareBar Adapter 8897

› Instructions

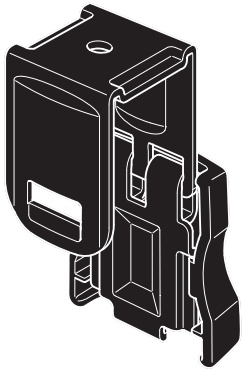



Thule SquareBar

889700
A6.20150410
501-8074-01

Bring your life
thule.com

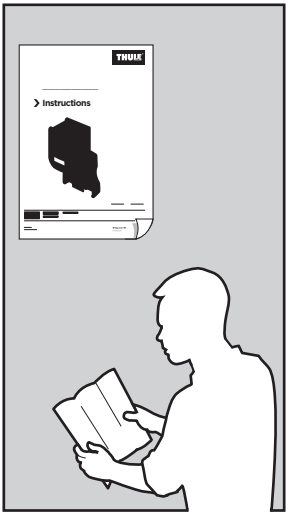
THULE
Instructions

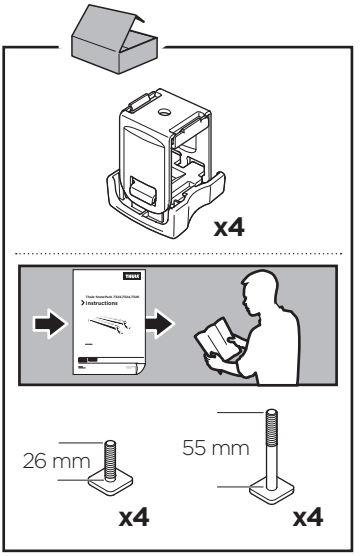
x4
THULE
Instructions
26 mm
x4
55 mm
x4

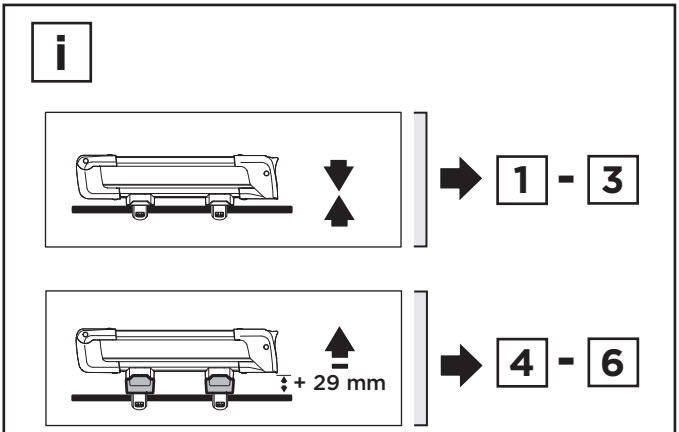
i
1 - 3
+ 29 mm
4 - 6

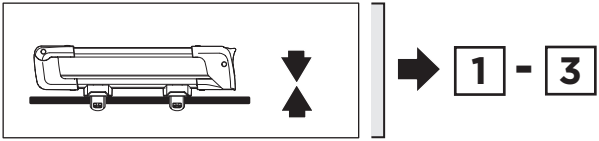
1 - 3

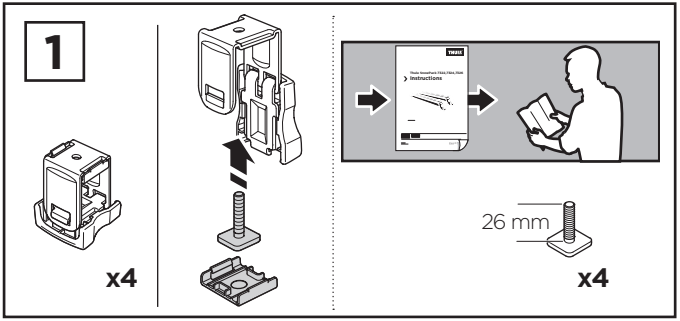
1
x4
Thule Hemisphere 9784,9784,9784
Instructions
26 mm
x4

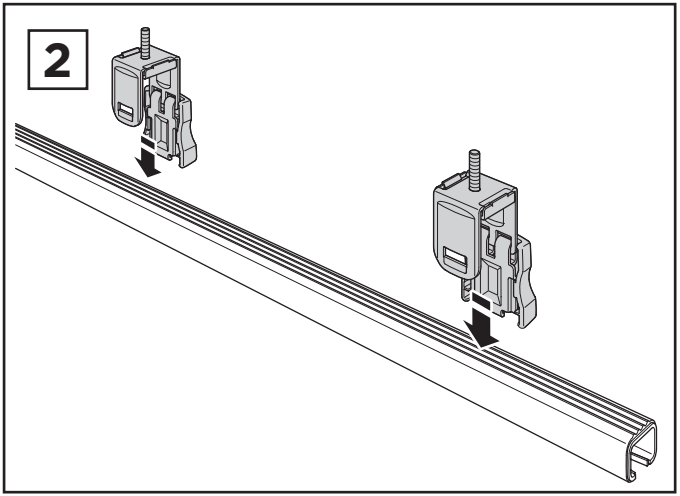
2

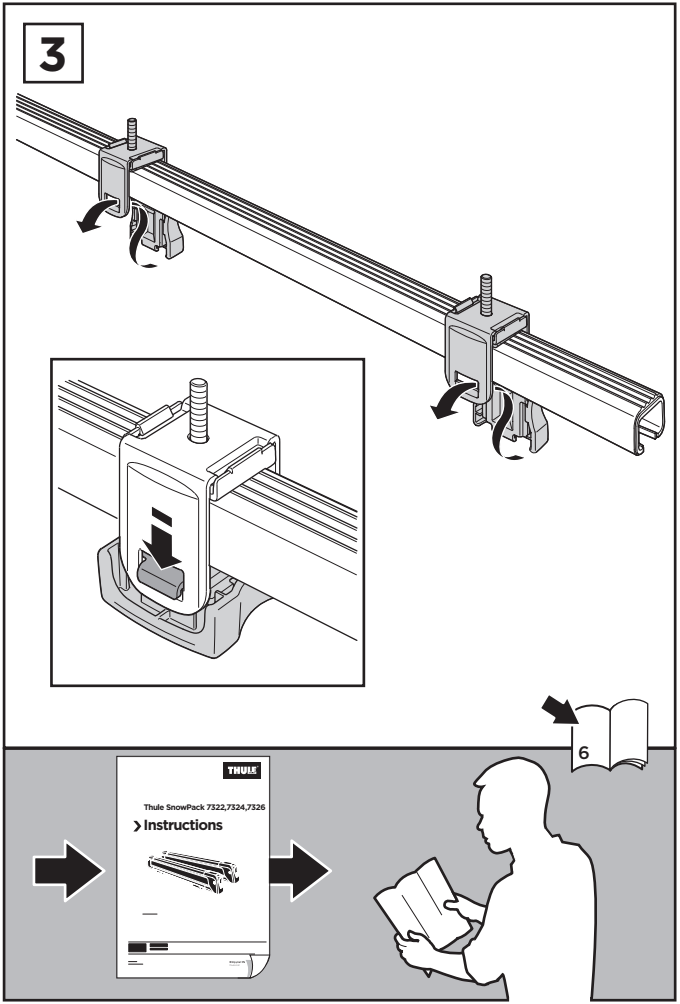
3
6
THULE
Thule SnowPack 7322,7324,7326
Instructions

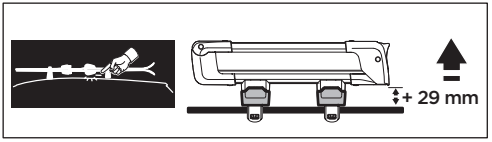
+ 29 mm
4 - 6

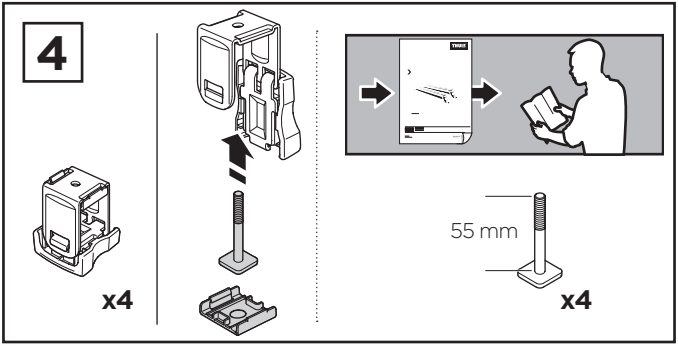
4
x4
55 mm
x4

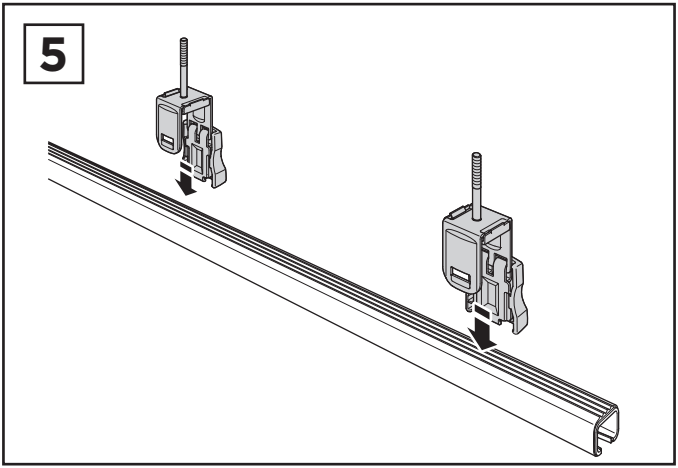
5

6

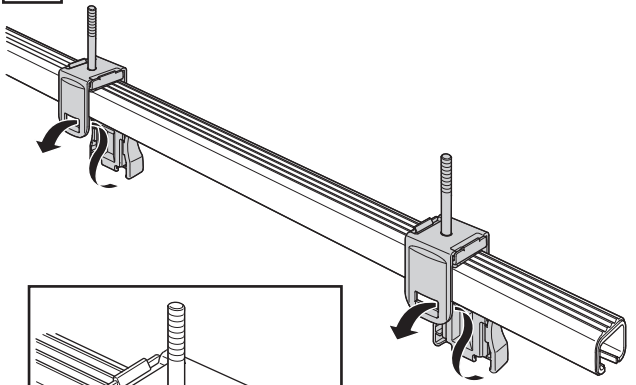

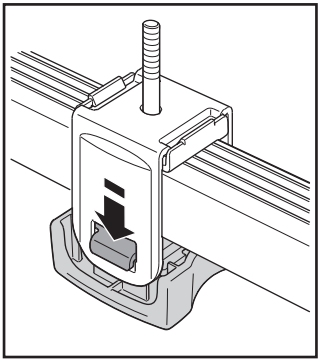







www.thule.com

info@thule.com

Thule Sweden AB, Box 69, 330 33 Hillerstorp, SWEDEN

501-8074-01

PART OF THULE GROUP

© Thule Group 2015. All rights reserved.