Instructions

Thule Approach 2 Awning

901027 / 901028



THULE GUARANTEE

THULE.COM

Bring your life

thule.com





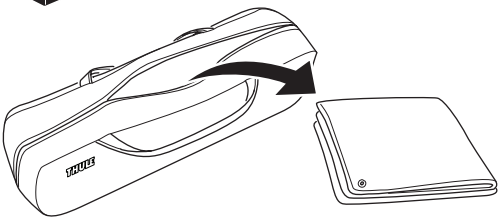

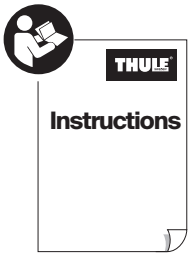

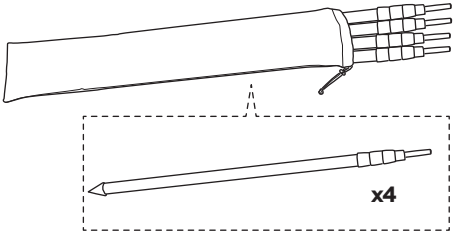

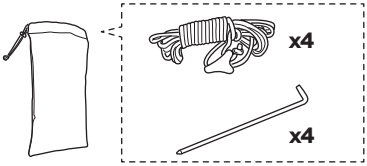

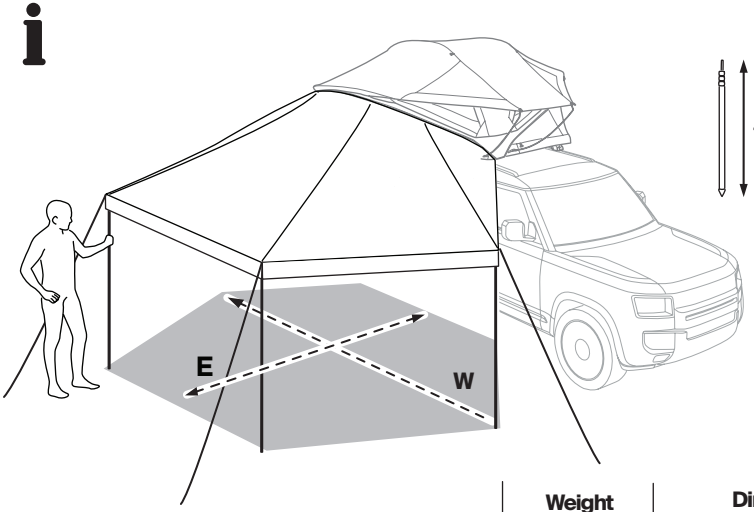

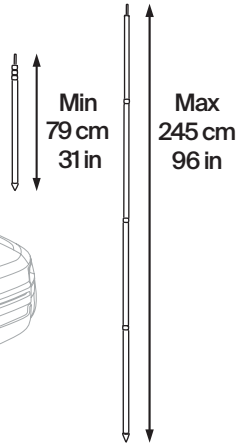

		Weight	Dimensions Open E x W
S/M	**Thule Approach 2 Awning S/M** 901027	3.7 kg 8.2 lbs	300 x 380 cm 118 x 150 in
L	**Thule Approach 2 Awning L** 901028	3.9 kg 8.6 lbs	300 x 458 cm 118 x 180 in

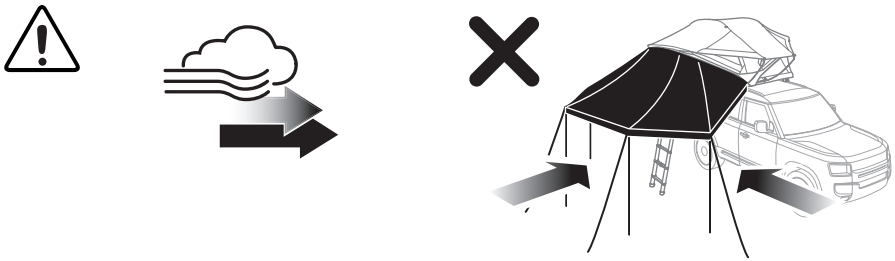

1



A

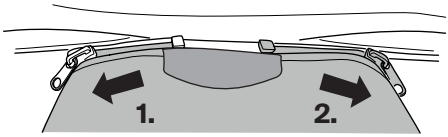

B

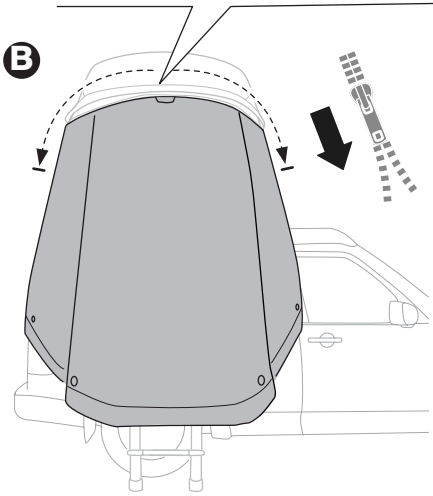

C



D

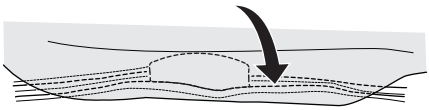

2



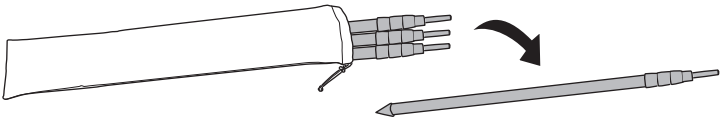

A

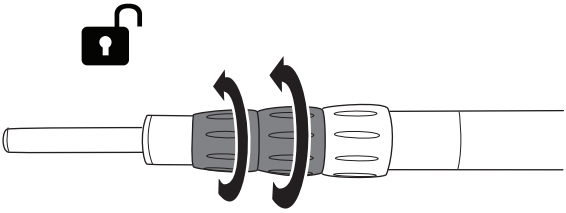

B

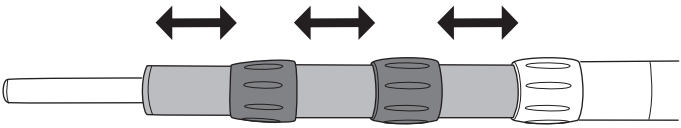

C



i

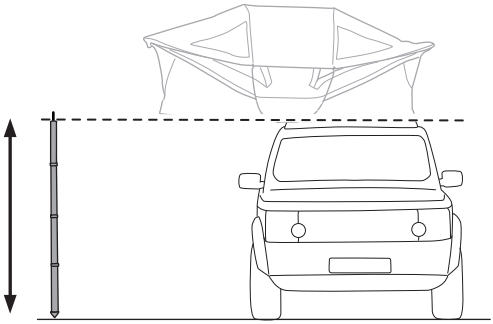

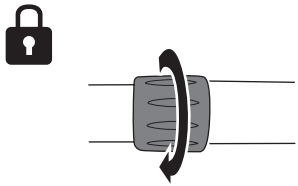

3

x4

x4

A

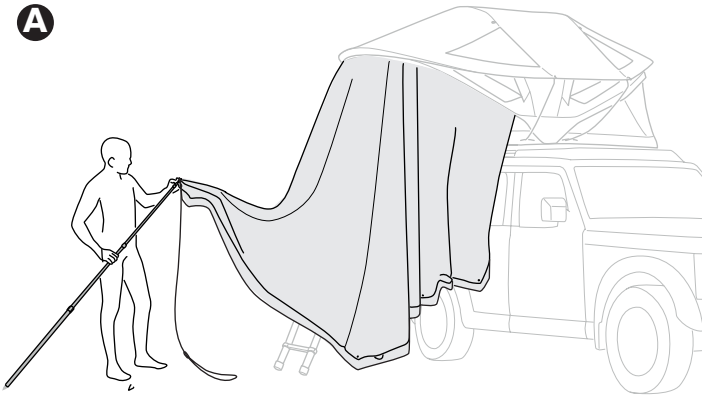

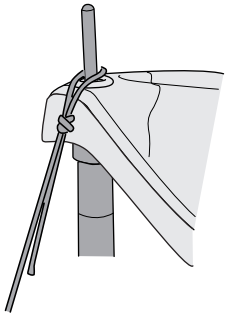

B

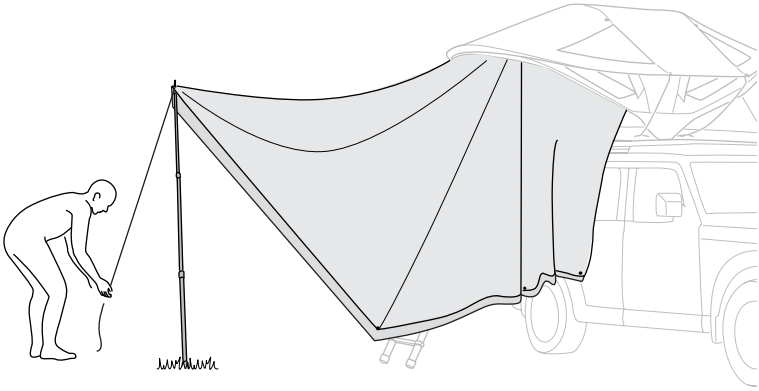

C

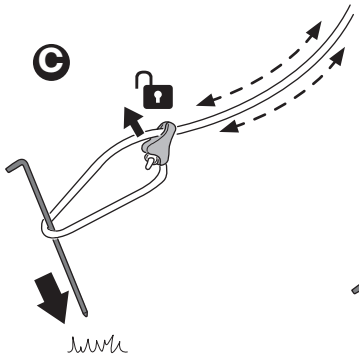

D

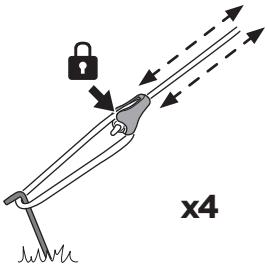

x4

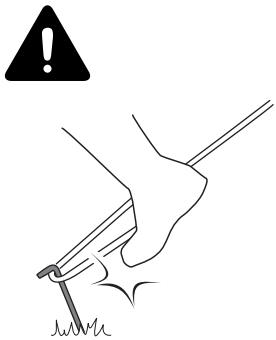

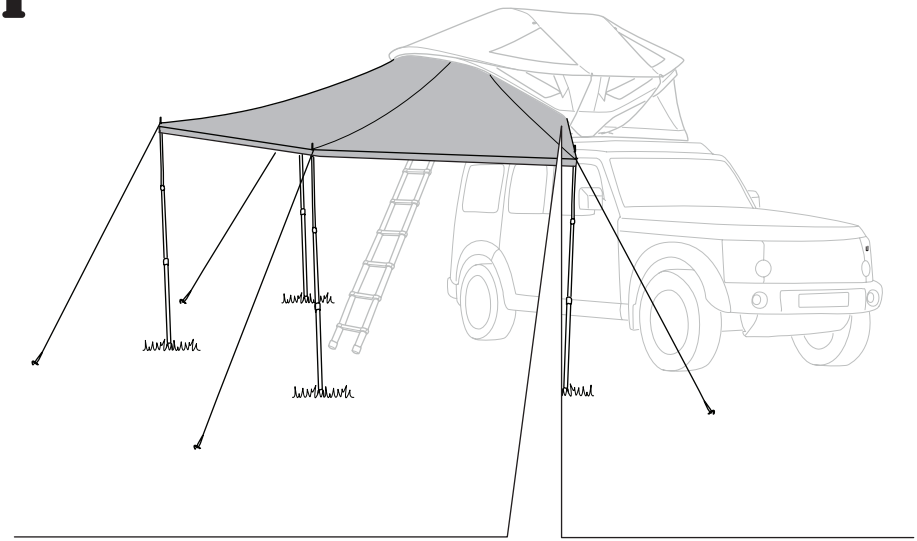

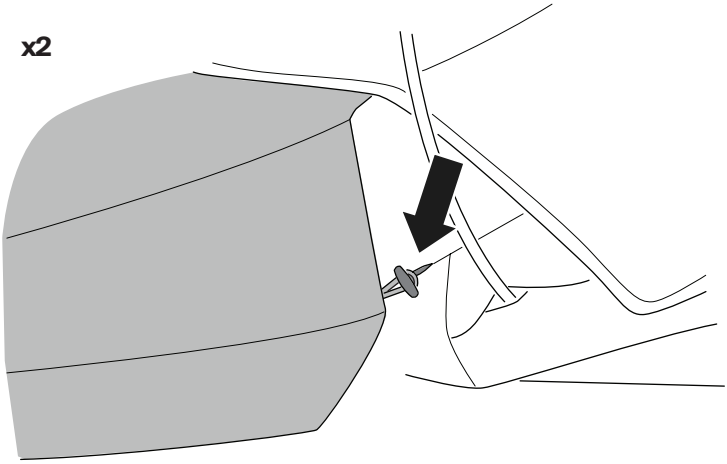
x2

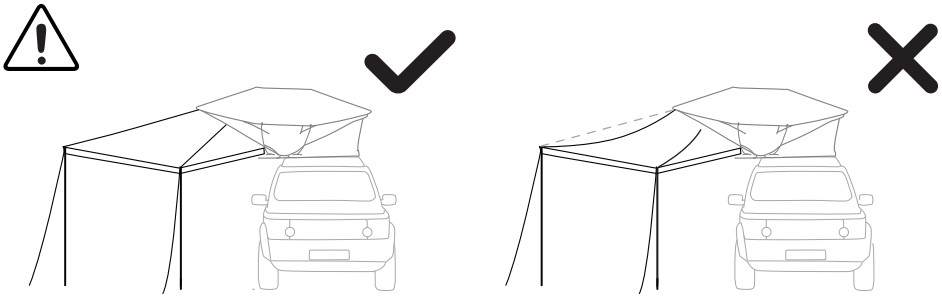

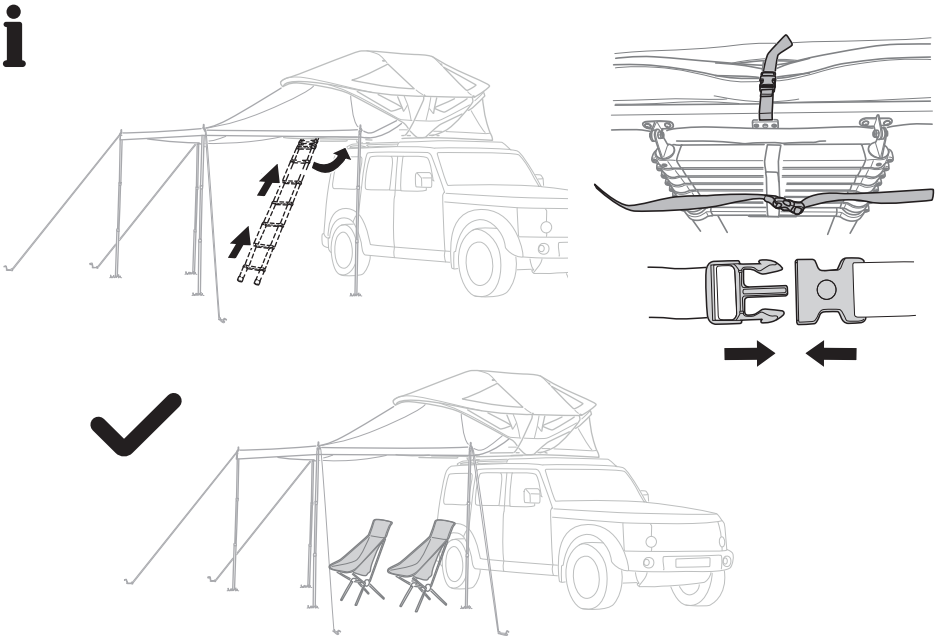

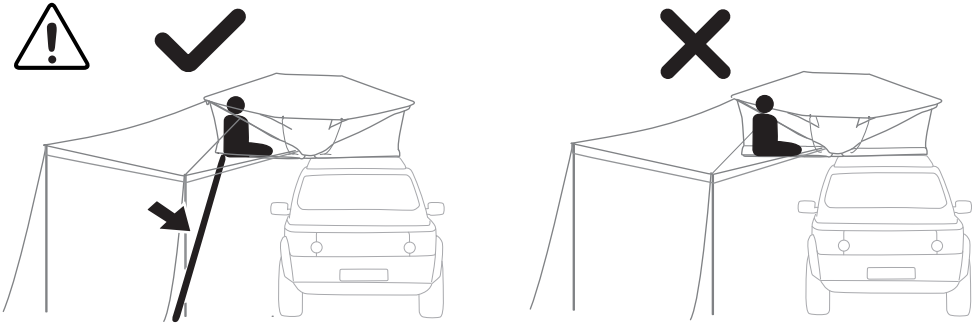

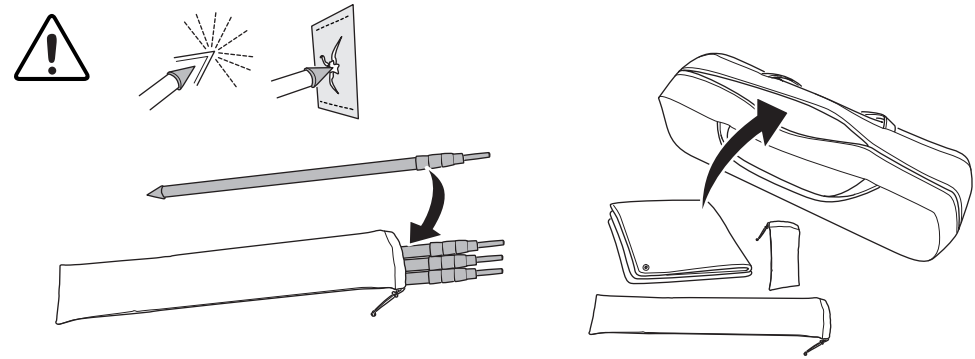

Thule Sweden AB
Borggatan 5, 335 73 Hillerstorp, Sweden
info@thule.com | *www.thule.com*

©**Thule.** All rights reserved.
5562535001 | *2025-10-27 #00*