1 Kit 5061

SEAT Ateca, 5-dr SUV, 16-

ISO 11154-E

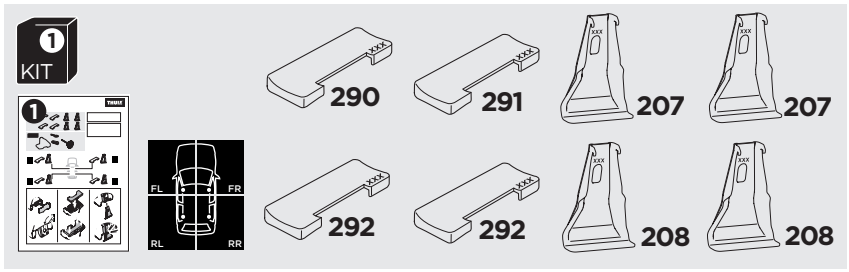

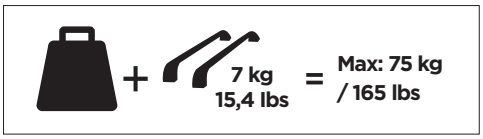

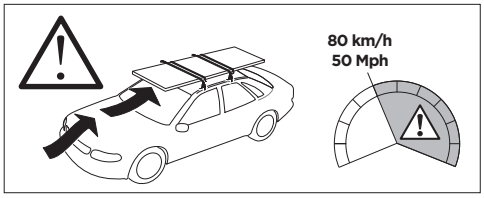

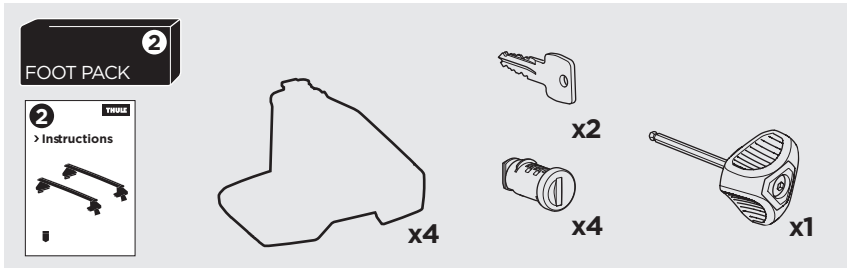

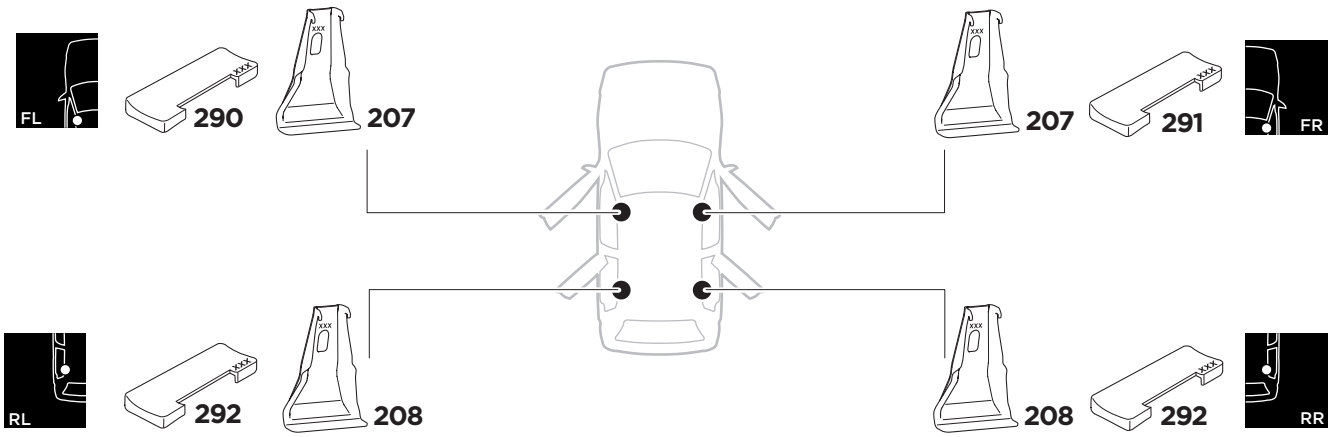

1

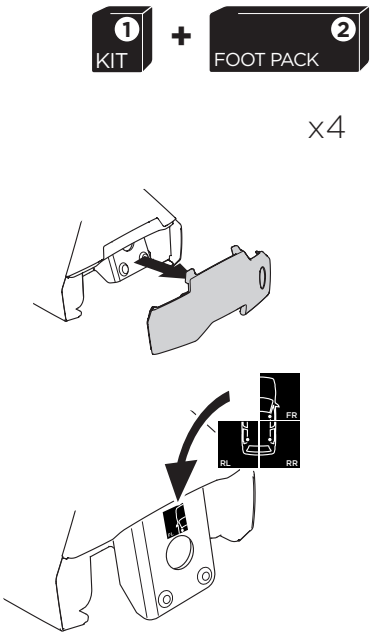

2

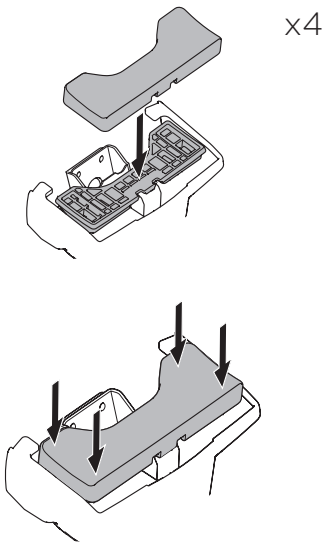

3

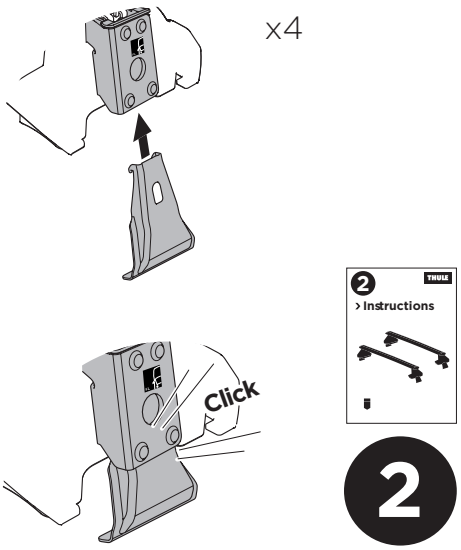

2

521-5061-01

Bring your life
thule.com

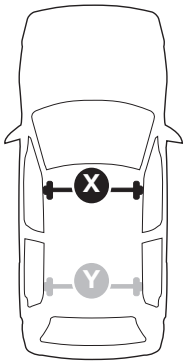

THULE WingBar Evo	THULE WingBar Edge	THULE WingBar	THULE SquareBar	Evo X (scale)	Edge X (scale)
SEAT Ateca, 5-dr SUV, 16-				**48**	**A**

THULE ProBar	THULE SlideBar	X (mm/inch)
SEAT Ateca, 5-dr SUV, 16-		**1131 mm / 44 1/2“**

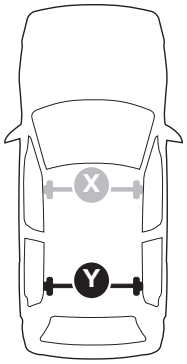

THULE WingBar Evo	THULE WingBar Edge	THULE WingBar	THULE SquareBar	Evo Y (scale)	Edge Y (scale)
SEAT Ateca, 5-dr SUV, 16-				**41,5**	**N**

THULE ProBar	THULE SlideBar	Y (mm/inch)
SEAT Ateca, 5-dr SUV, 16-		**1066 mm / 42“**

	W (mm/inch)	Z (mm/inch)
SEAT Ateca, 5-dr SUV, 16-	**720 mm / 28 3/8“**	**320 mm / 12 5/8“**

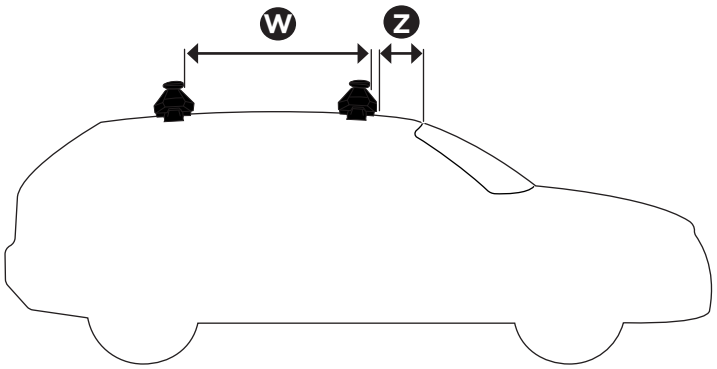

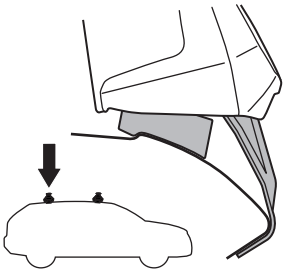

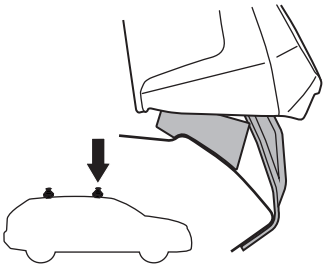





Thule Sweden AB, Borggatan 5
335 73 Hillerstorp, SWEDEN
» PART OF THULE GROUP

info@thule.com

www.thule.com

© Thule Group 2018. All rights reserved.