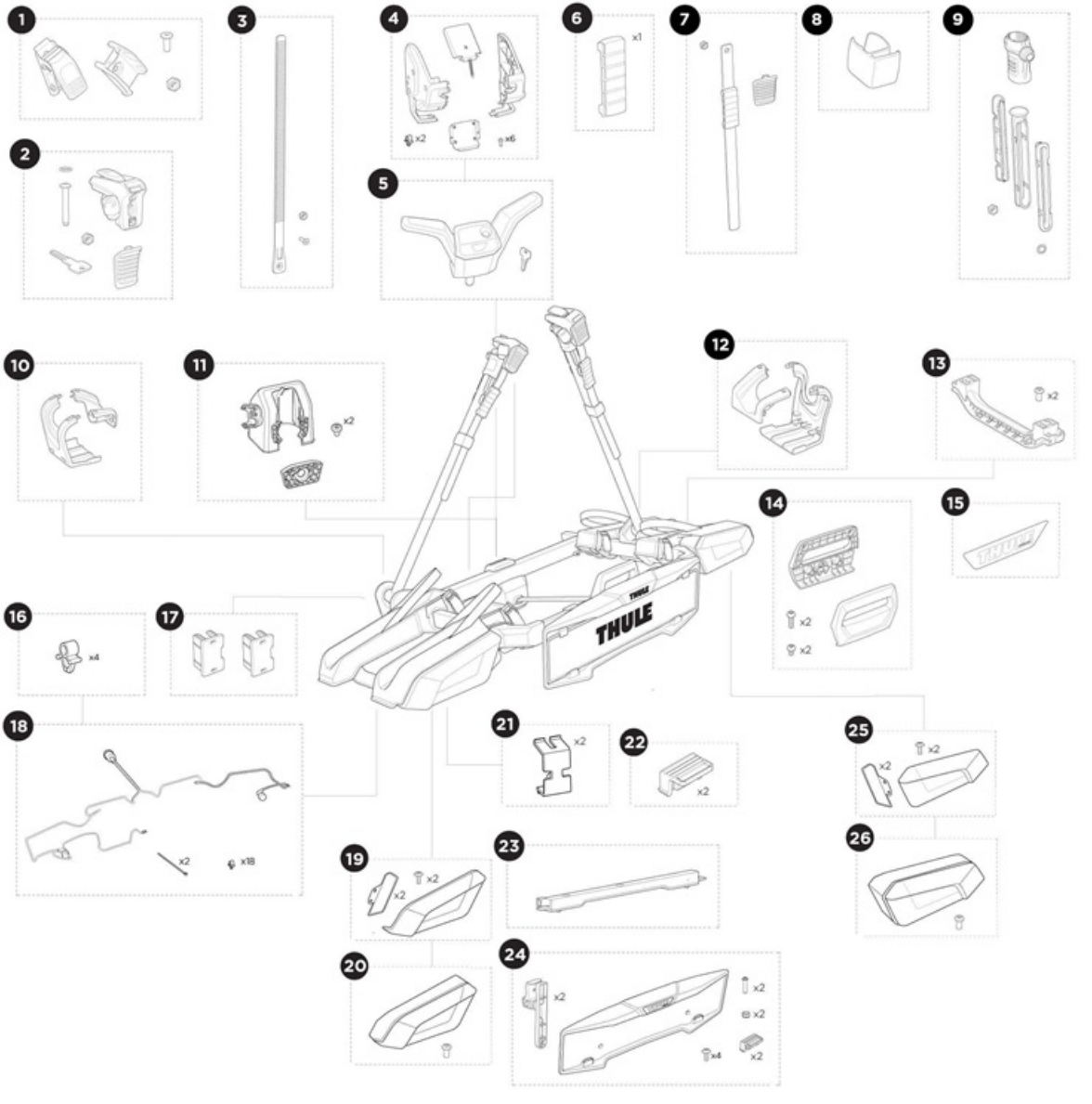
1
2
3
4
x2
x6
5
6
x1
7
8
9
10
11
x2
12
13
x2
14
x2
x2
15
16
x4
17
18
x2
x18
19
x2
x2
20
21
x2
22
x2
23
24
x2
x2
x2
x4
x2
25
x2
x2
26
THULE

Alkatrész	SKU
1. Wheel holder pump buckle	1500055517
2. Bike arm head	1500055672
3. Wheel strap	1500055518
4. Tilt hub covers	1500055534
5. Handle tightening complete	1500055528
6. Strap sleeve	1500054998
7. Bike attachment	1500055524
8. Strap parking position	1500055525
9. Slider bike head	1500055526
10. Bike arm covers left	1500055535
11. Coupling cover incl. holder	1500055537
12. Bike arm covers right	1500055536
13. Wheel tray handle	1500055527
14. Carrying handle	1500055531
15. Thule logotype decal	1500055530
16. Cable clip	1500052540
17. End cap	1500055582
18. Lamp cable	1500055011
19. Wheel tray last position left	1500055519
20. Lamp Left Midipoint VII LHD	1500055277
21. Lens and filter Left, VII	1500055281
22. Lamp attachment clip	1500055521
23. Clip number plate	1500055408
24. Lamp license plate	1500055018
25. Number plate holder complete	1500055529
26. Wheel tray last position right	1500055520