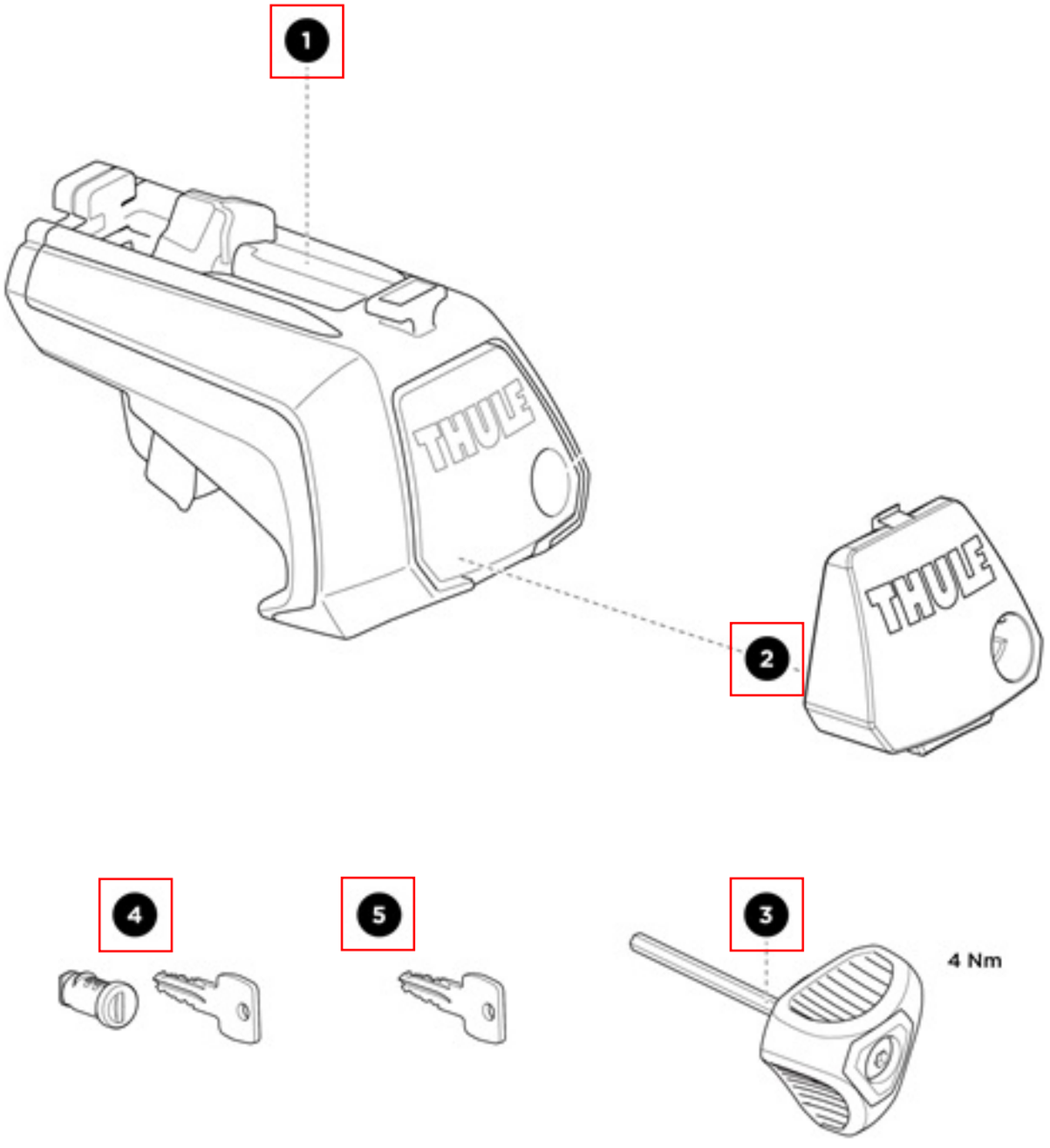
1
THULE
2
THULE
4
5
3
4 Nm

Alkatrész	SKU
1. Foot	1500054676
2. Front Cover	1500052985
3. Torque Key 4Nm	1500052988
4. Lock Cylinder	Go to "Keys & Locks"
5. Key	Go to "Keys & Locks"