# Thule Board Shuttle 811

# › Instructions

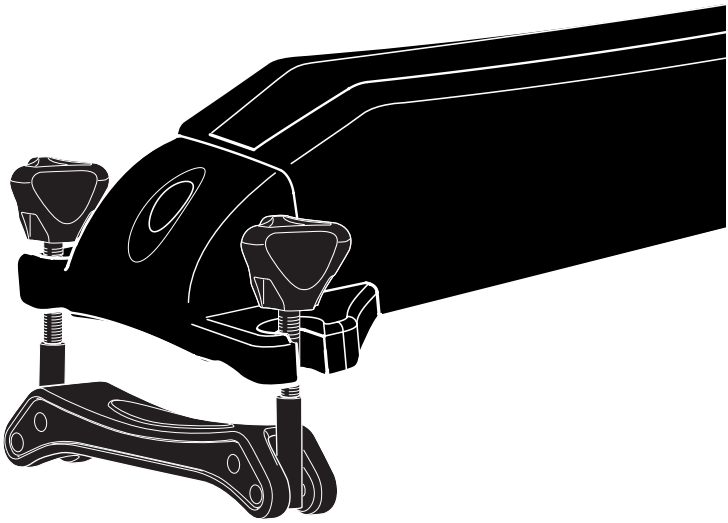

Surf/SUP board carrier

CITY CRASH
Complies with ISO norm

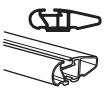
Thule WingBar/
Thule Aeroblade

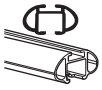
Thule AeroBar

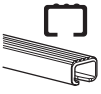
SquareBar


Thule ProBar

811000

C.20141121
501-7923-04

**Bring your life**
thule.com

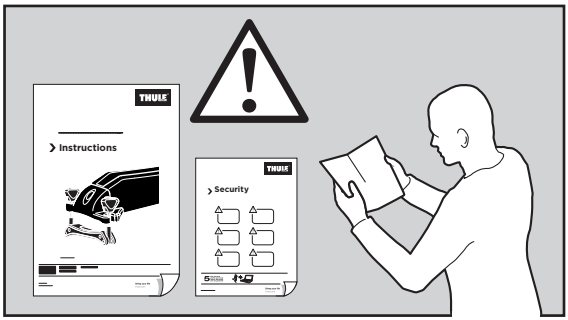
THULE
Instructions
THULE
Security

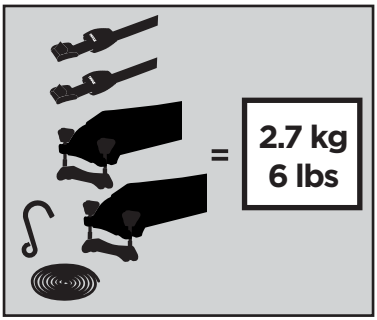
=
2.7 kg
6 lbs

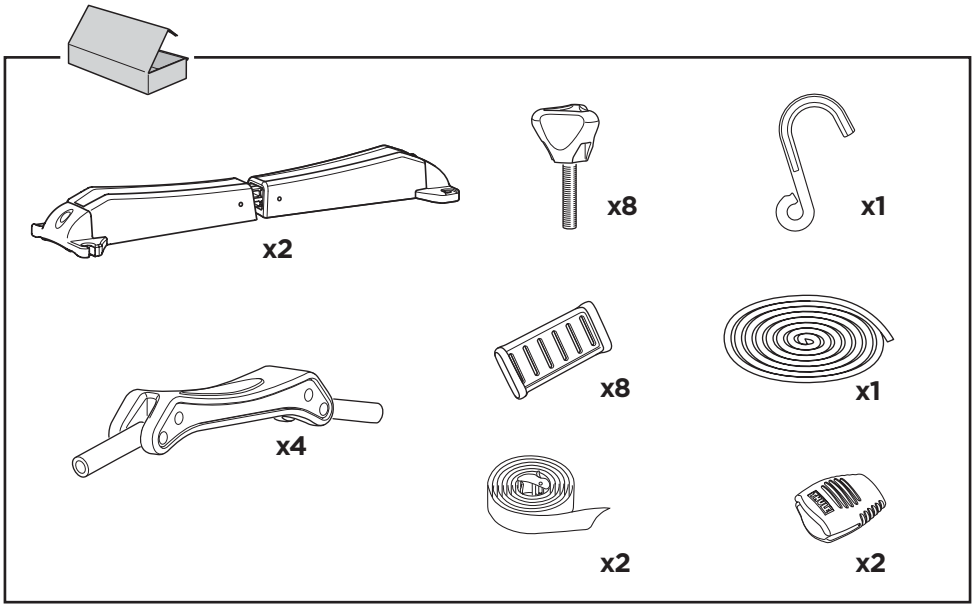
x2
x8
x1
x4
x8
x1
x2
x2

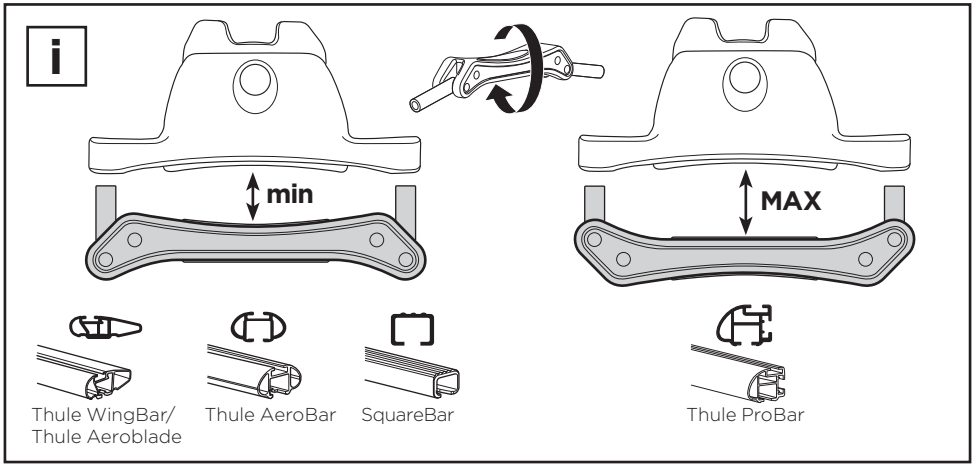
i
min
MAX
Thule WingBar/
Thule Aeroblade
Thule AeroBar
SquareBar
Thule ProBar

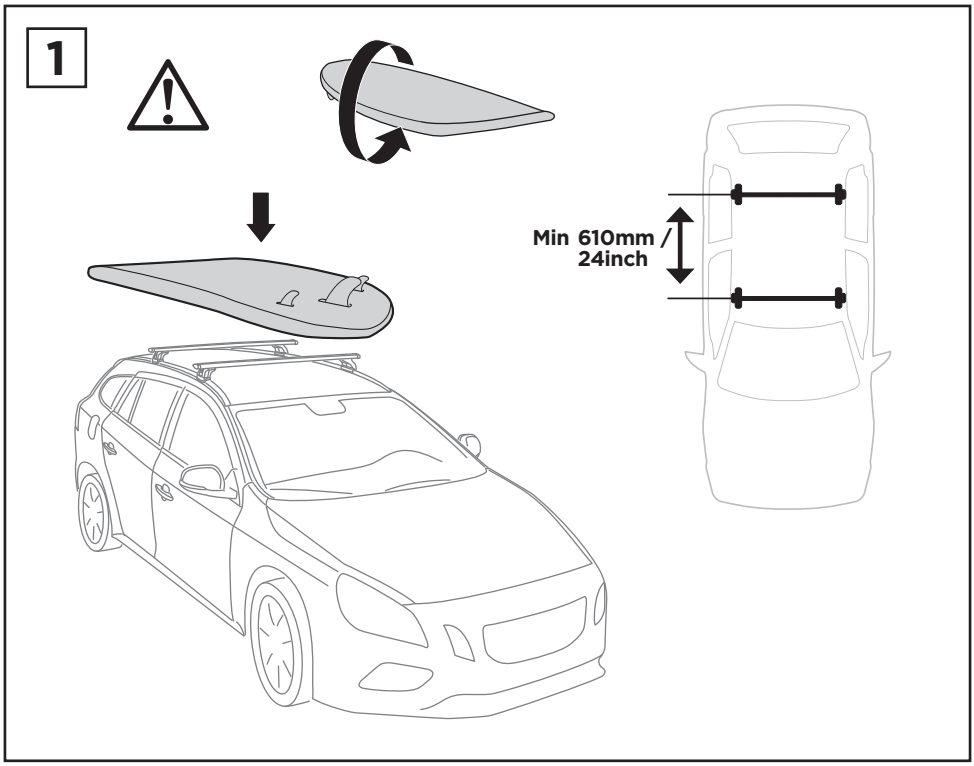
1
Min 610mm /
24inch

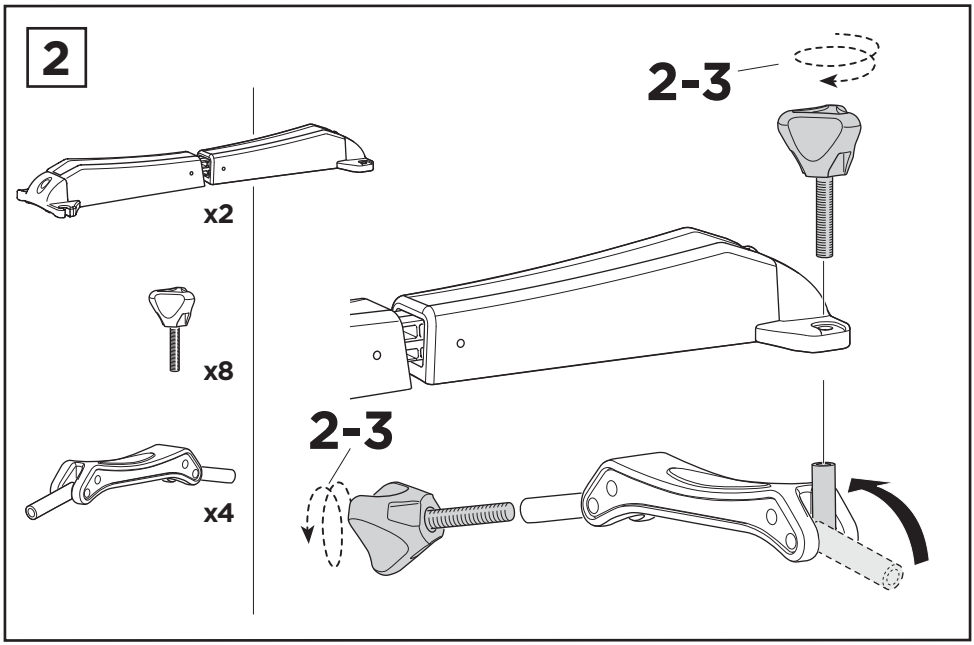
2
2-3
x2
x8
x4
2-3

**3**

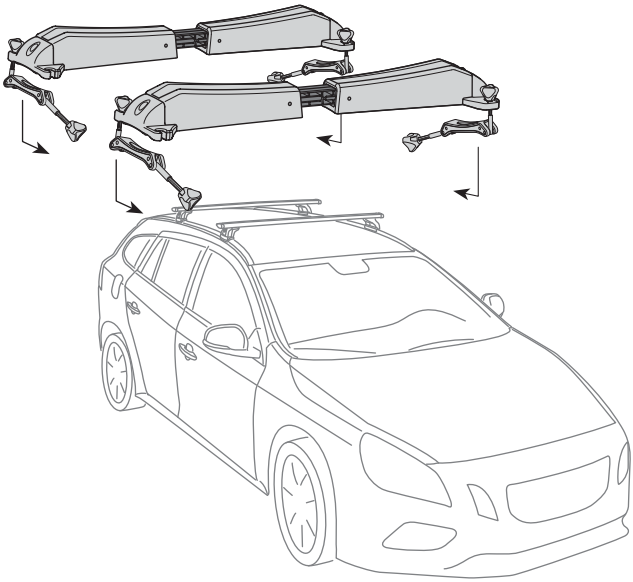

**4**

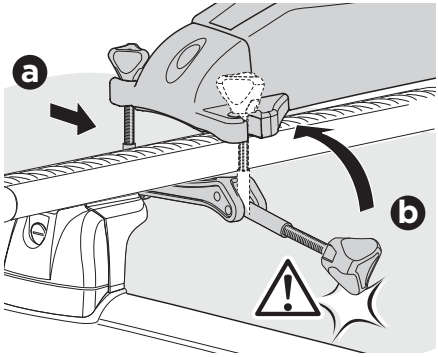


**5**

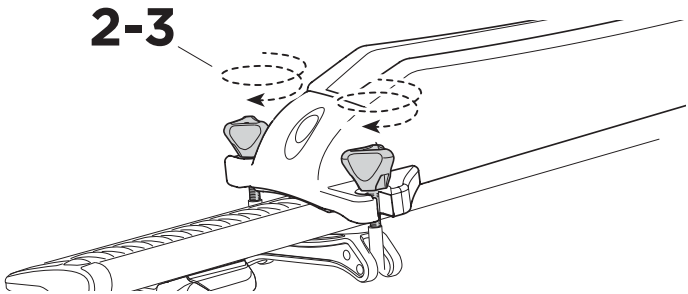

**6**

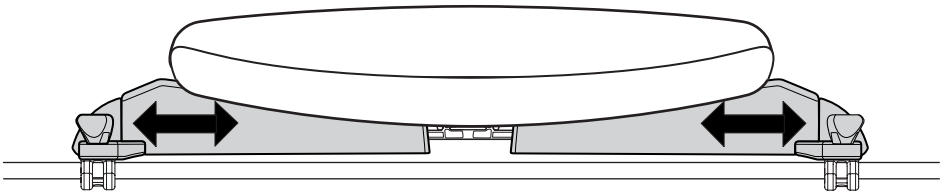

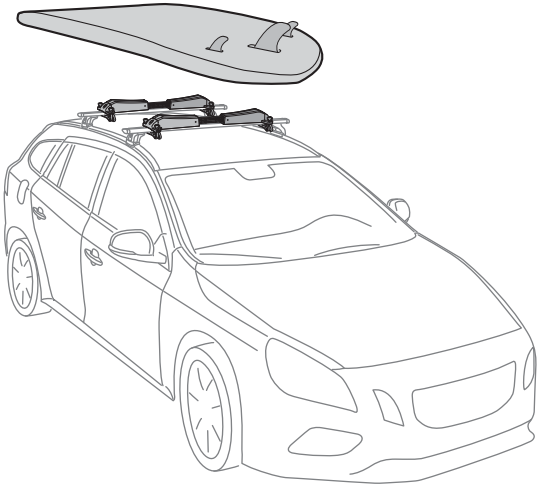

**7**

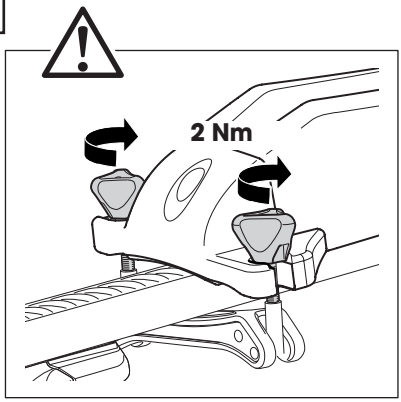


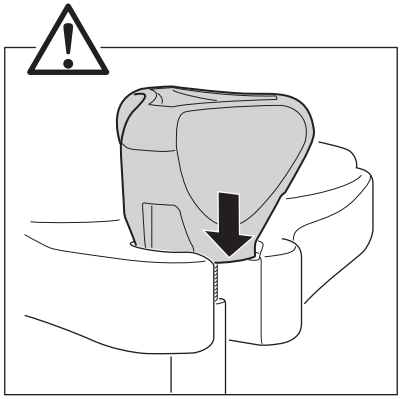

## 8

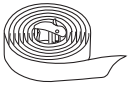

x2



x2

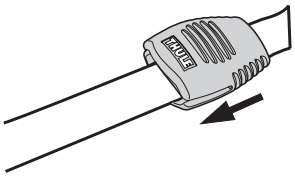

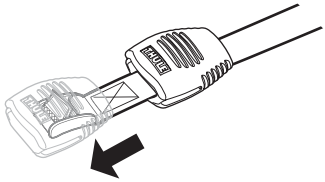

## 9



x8

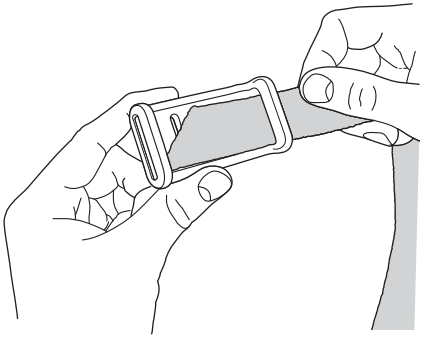

## 10

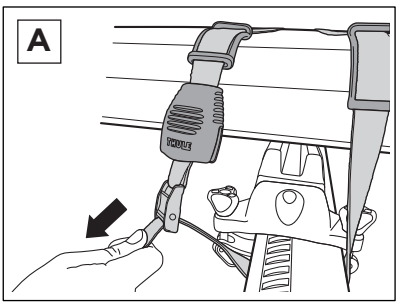


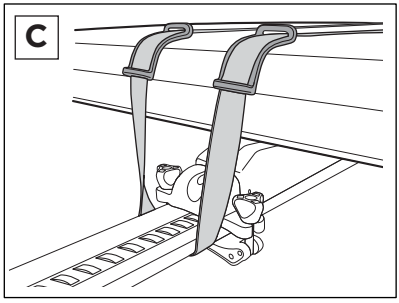


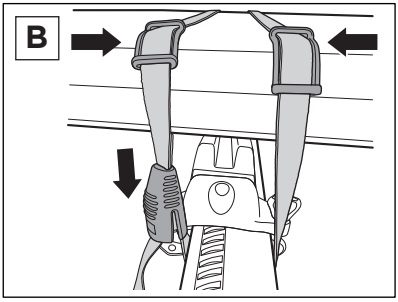


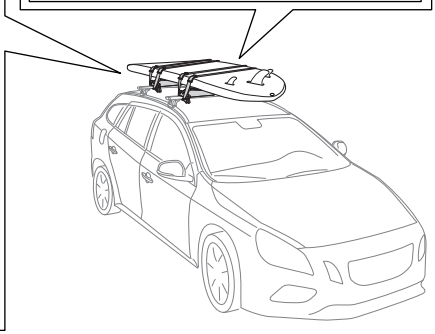

**11**

x1 x1

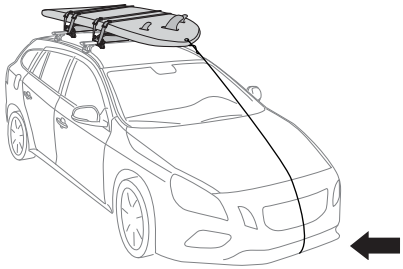

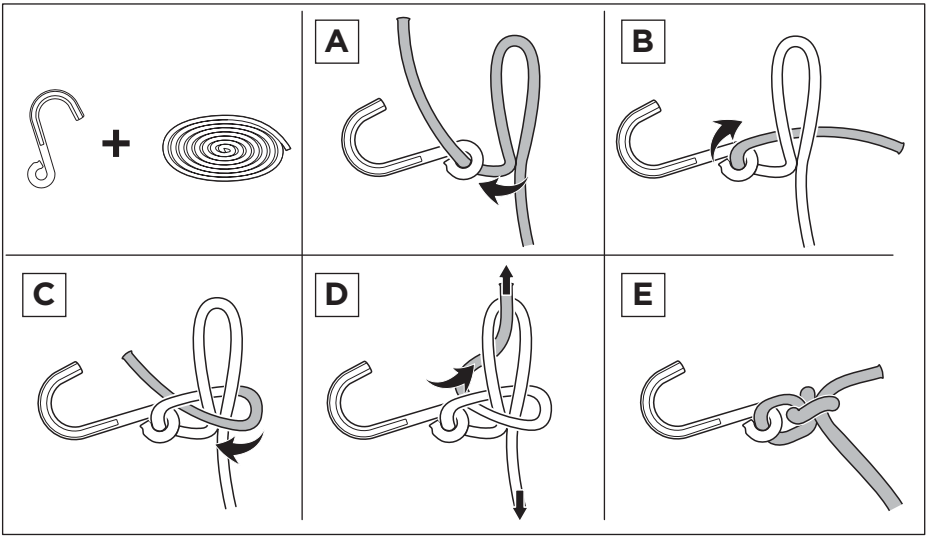


**i**



=

Max
50 kg
110 lbs

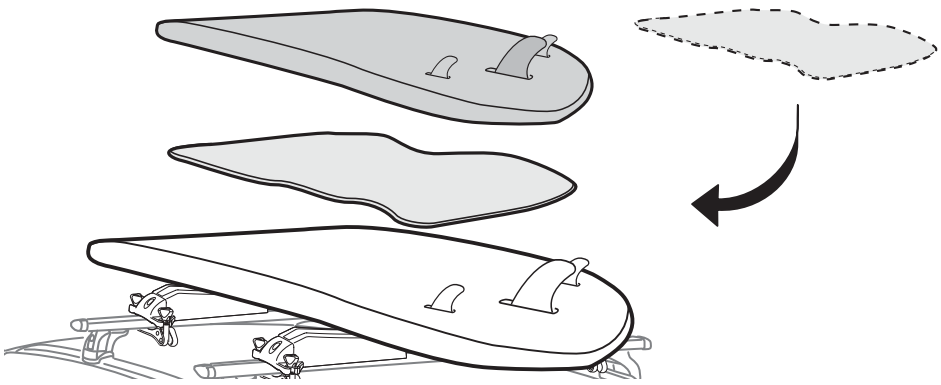

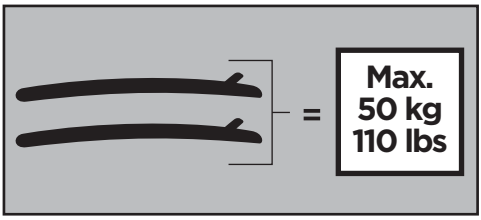


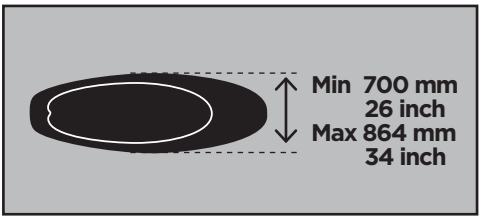


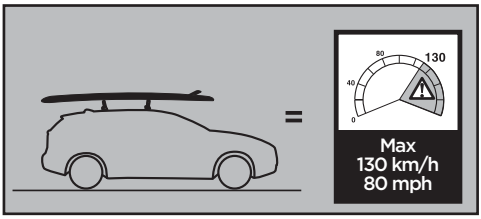


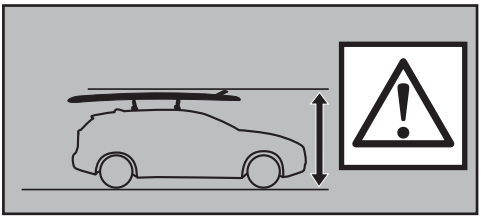

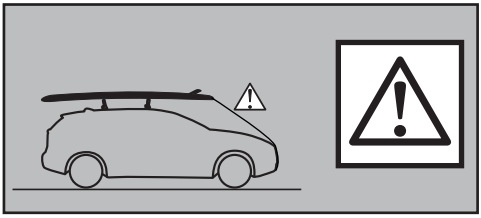

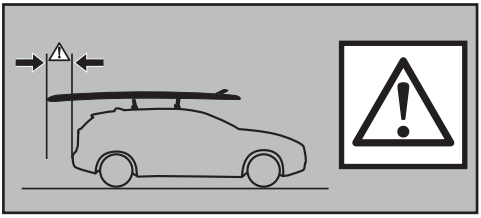

**EN** Accessories
**DE** Zubehör
**FR** Accessoires
**NL** Accessoires
**IT** Accessori
**ES** Accesorios
**PT** Acessórios
**SV** Tillbehör
**DK** Tilbehør
**NO** Tilbehør
**FI** Lisävarusteet
**ET** Lisavarustus
**LV** Piederumi
**LT** Priedai
**PL** Akcesoria
**RU** Аксессуары

**UK** Аксесуари
**BG** Принадлежности
**CS** Doplòky
**SK** Príslušenstvo
**SL** Dodatki
**HR/BiH** Dodaci
**RO** Accesorii
**HU** Tartozékok
**EL** Εξαρτήματα
**TR** Aksesuarlar
**AR** الملحقا
**HE** אביזרים
**ZH** 附件
**JA** アクセサリー
**KO** 액세서리
**TH** อุปกรณ์เสริม

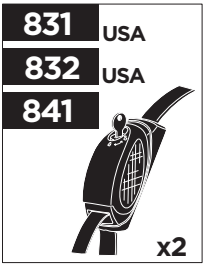





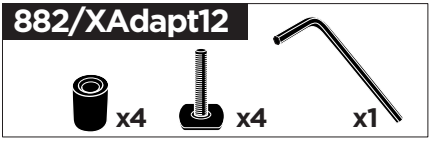


## Thule One-Key System

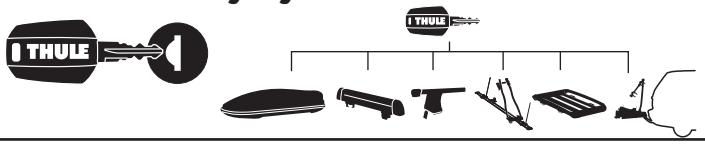


512 (x2)
544 (x4)
596 (x6)
588 (x8)
452 (x12)

WW NA
Thule Sweden AB, Box 69, 330 33 Hillerstorp, SWEDEN
Thule Inc., 42 Silvermine Road, Seymour, Connecticut 06483, USA
info@thule.com
Phone: 800-238-2388
www.thule.com
» PART OF THULE GROUP
© Thule Group 2014. All rights reserved.
501-7923-04