THULE SWEDEN

Thule Ladder Tilt 311

› Instructions

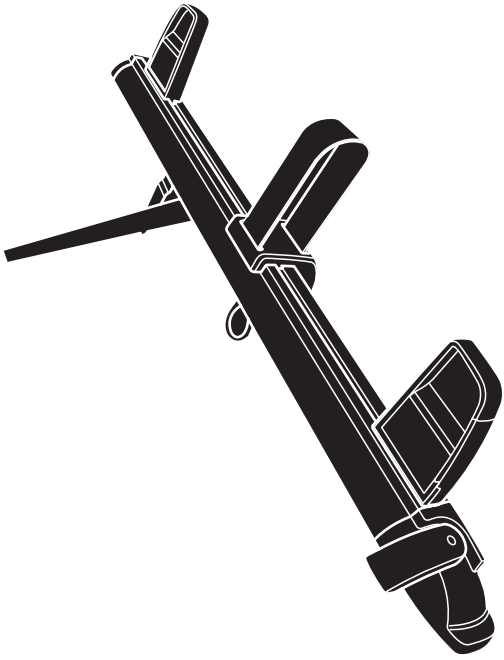

THULE BRING IT! GUARANTEE
THULE.COM

311010

A5/16.20160531
501-7171-08

Bring your life
thule.com

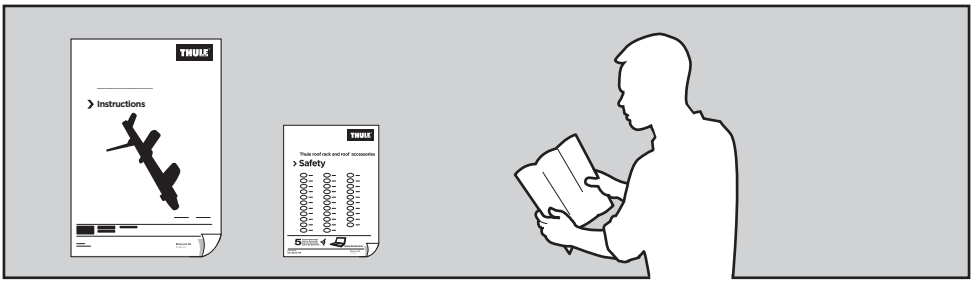
THULE
Instructions
THULE
Thule roof rack and roof accessories
Safety

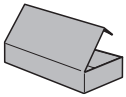

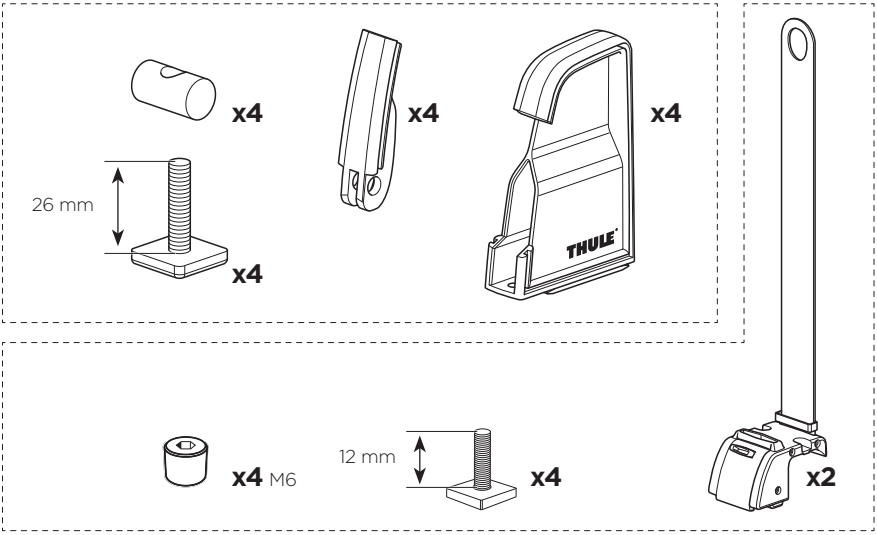
x4
x4
x4
26 mm
x4
THULE
x4 M6
12 mm
x4
x2

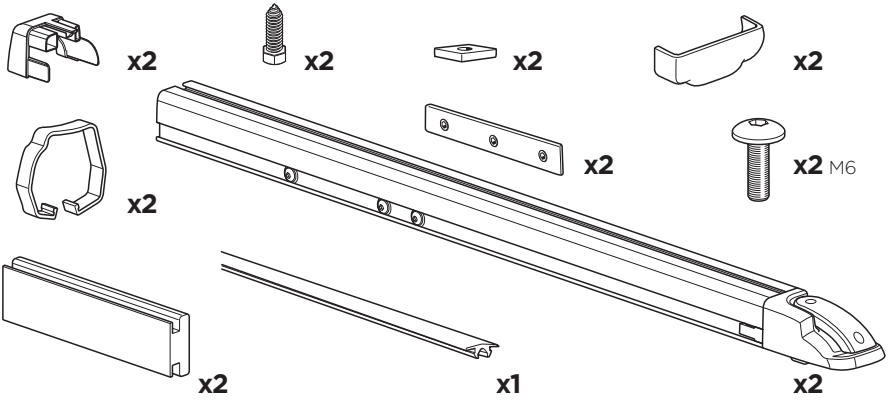
x2
x2
x2
x2
x2
x2
x2
x2 M6
x2
x1
x2

1

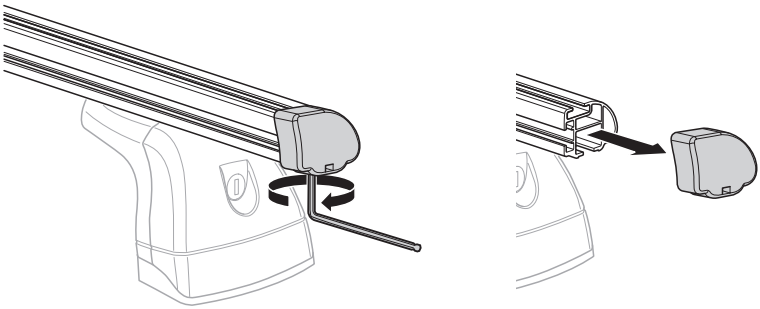

2

x4

x4

x4

x4

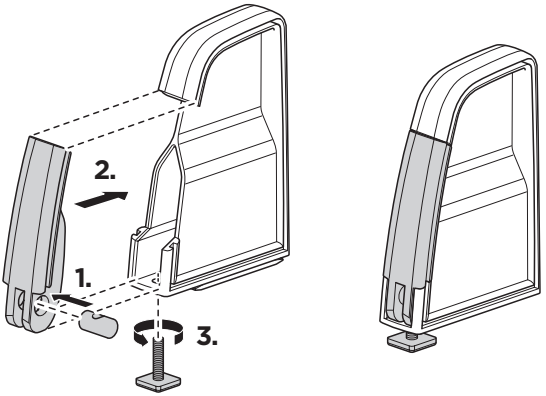

x4

x4

x2

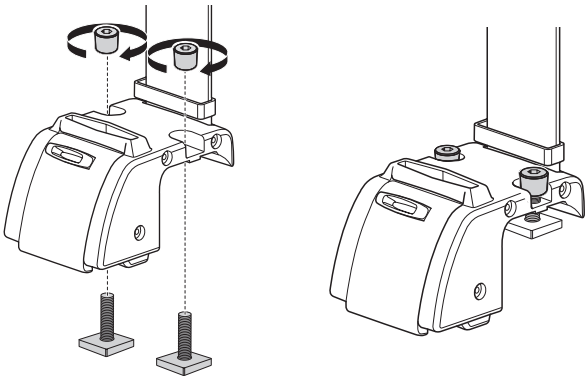

3



x4

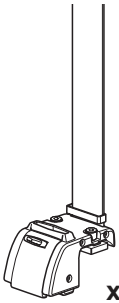

x2

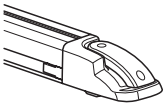

x2

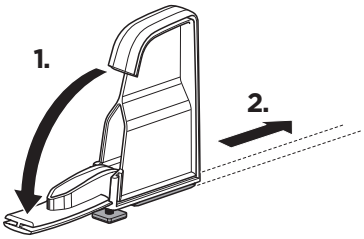

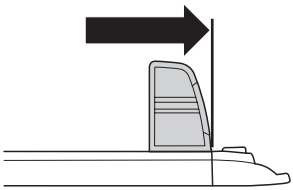

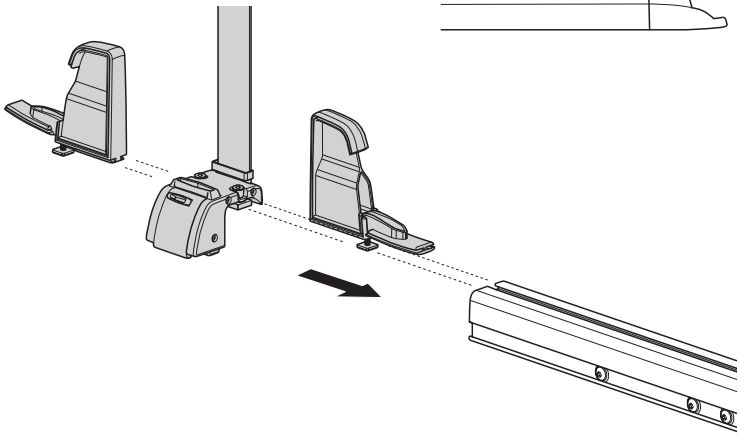

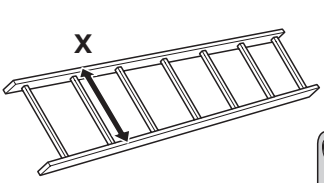

4

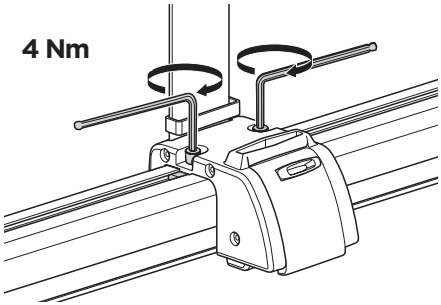

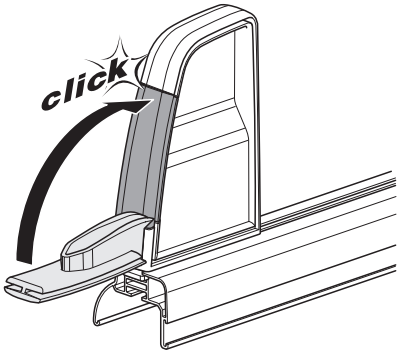

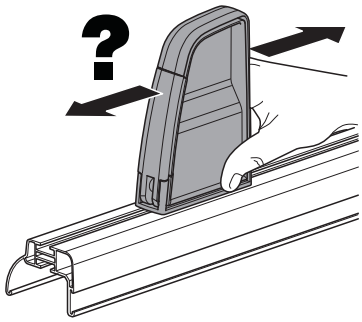

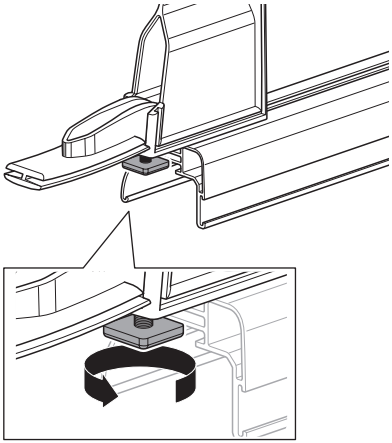

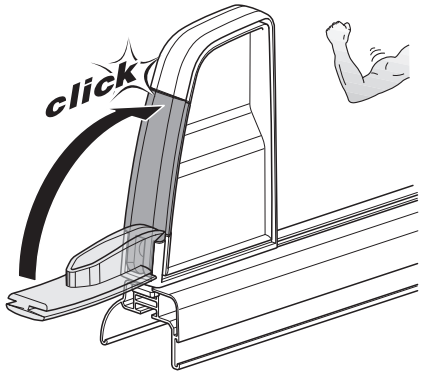

5

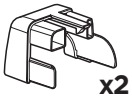

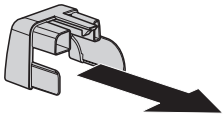

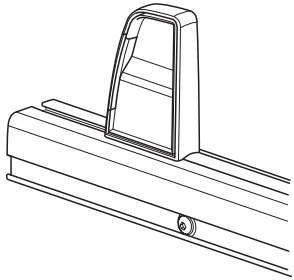

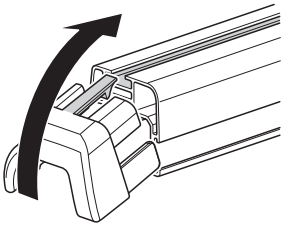

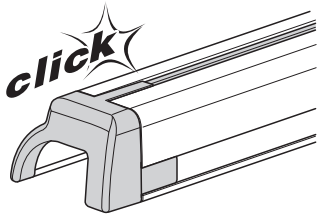

6

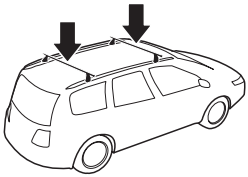

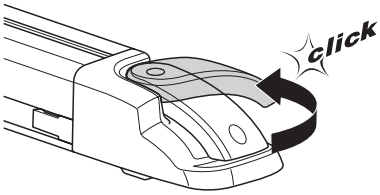



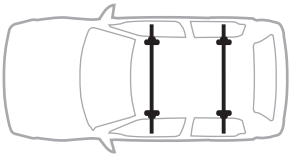



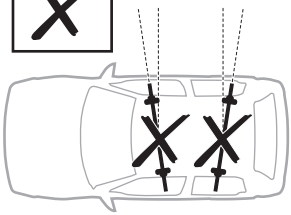

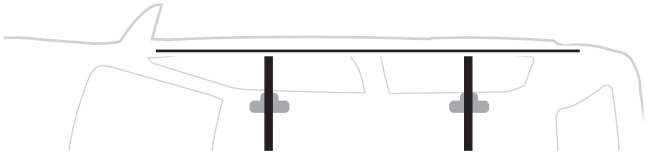

7

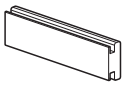

x2

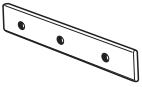

x2

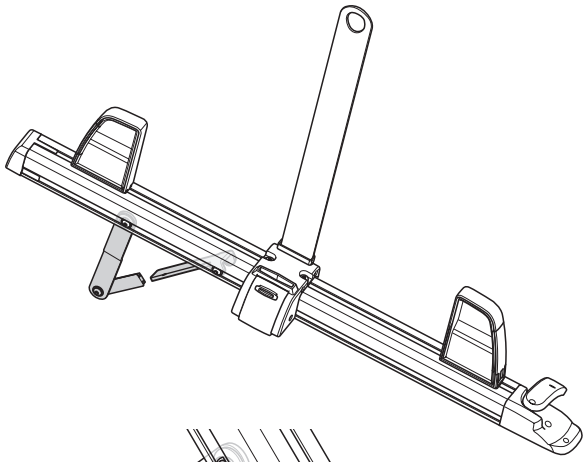

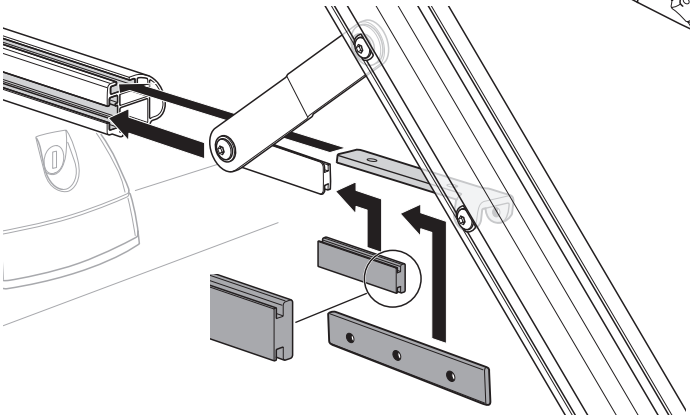

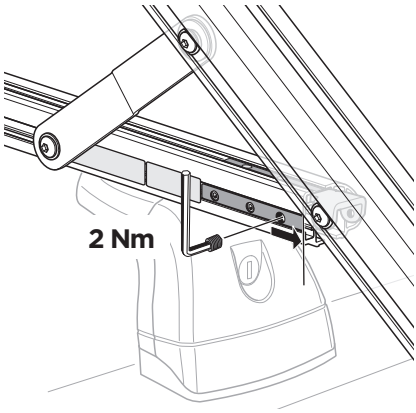

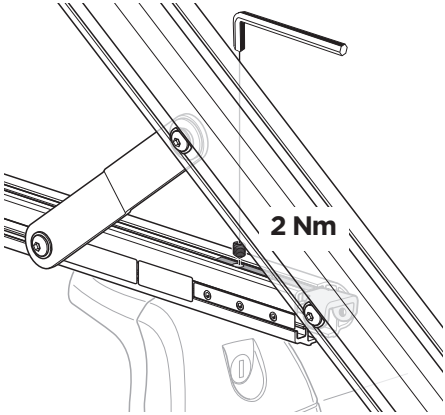

8

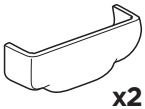

x2



x2



x2

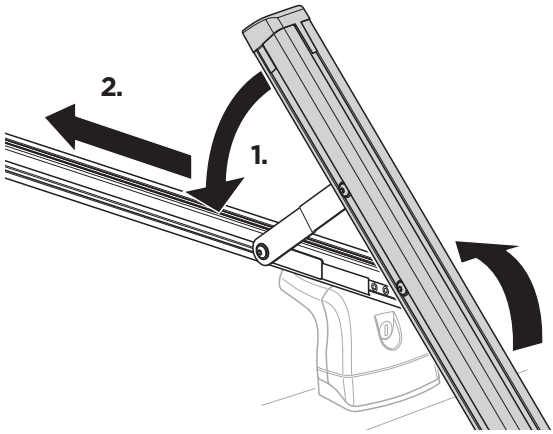

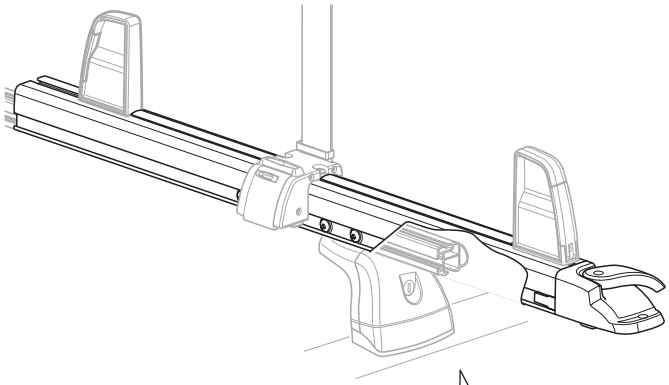

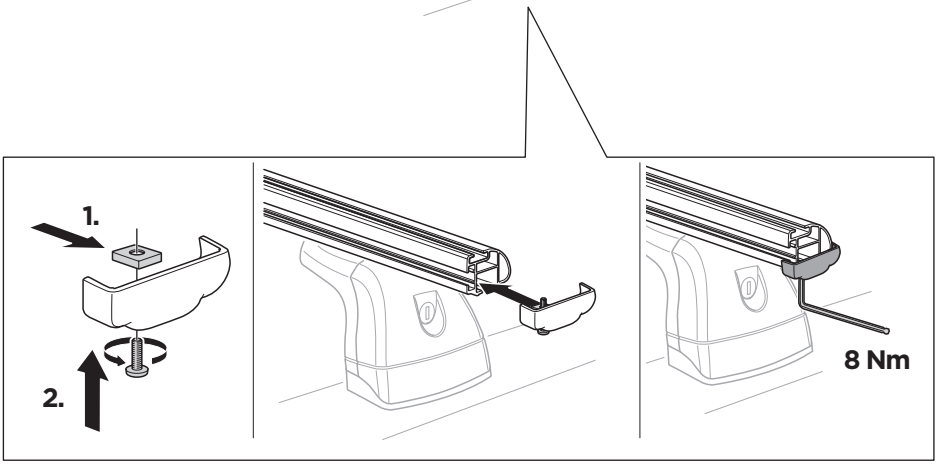

9



x2

1.

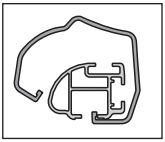

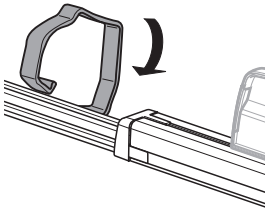

2.

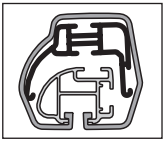

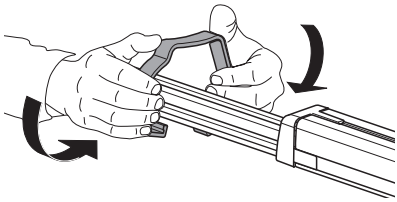

3.

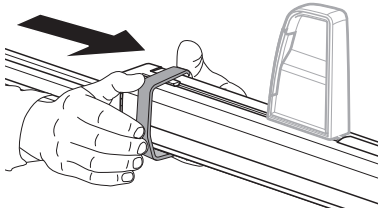

4.



x2

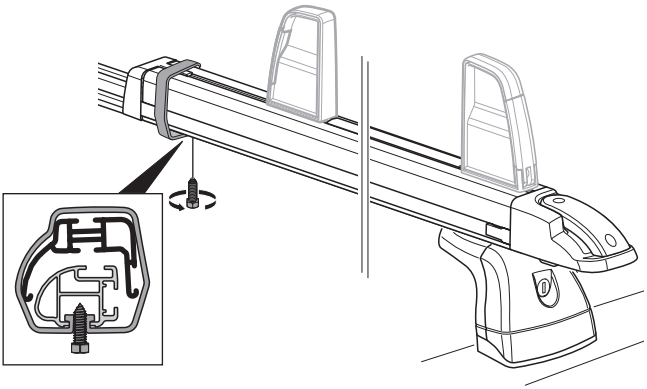

10

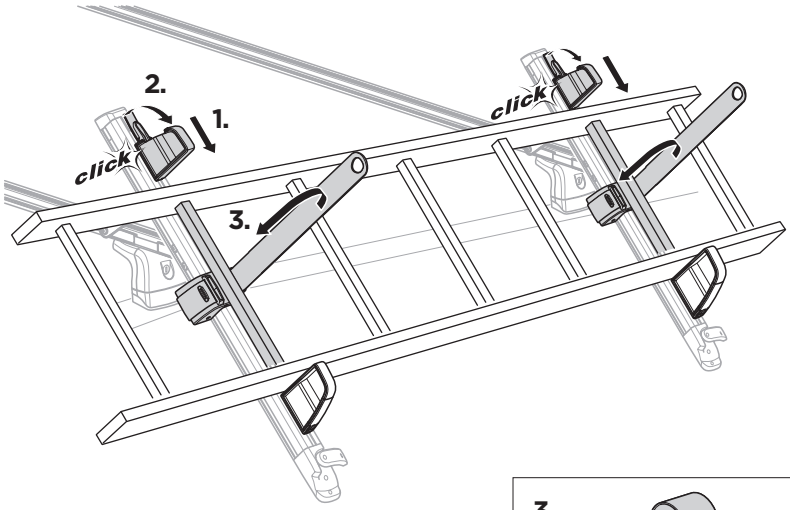

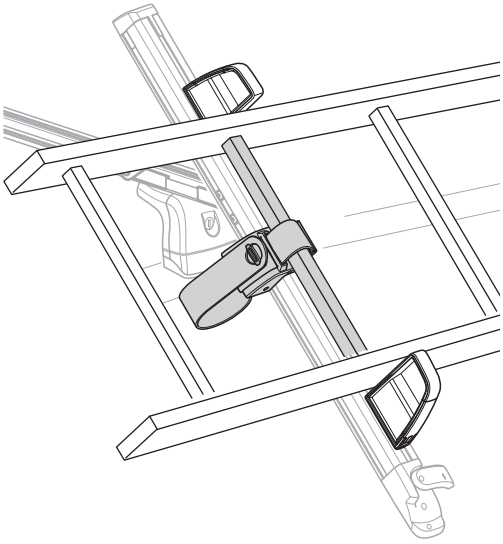

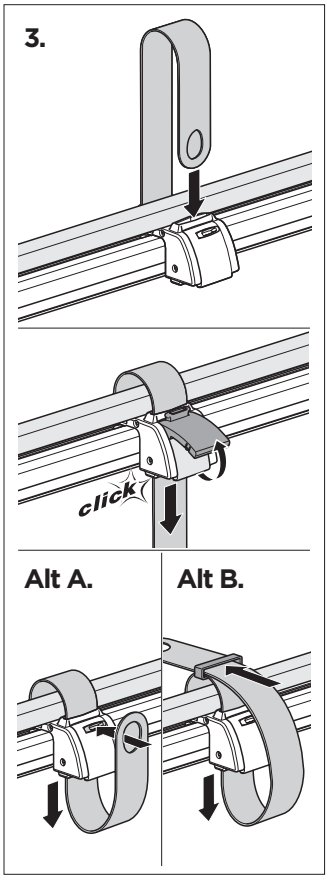

i

ok

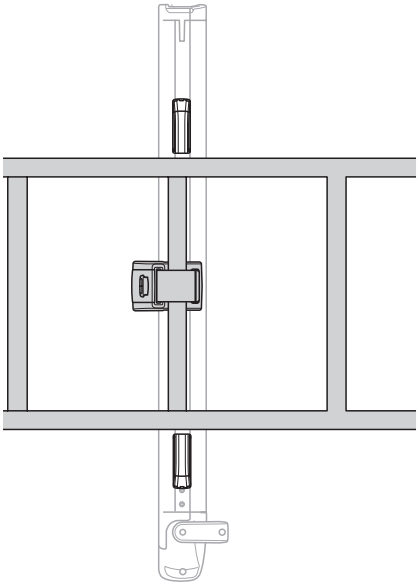

Not ok

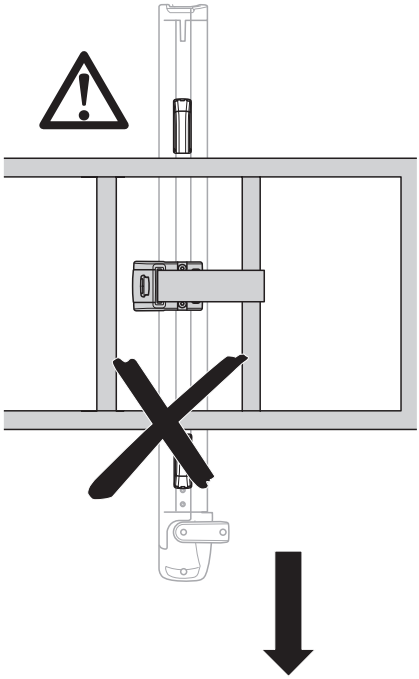

310



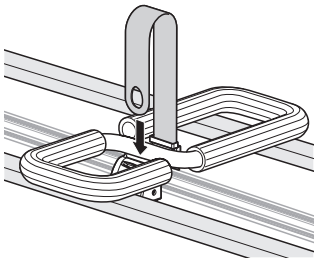

11

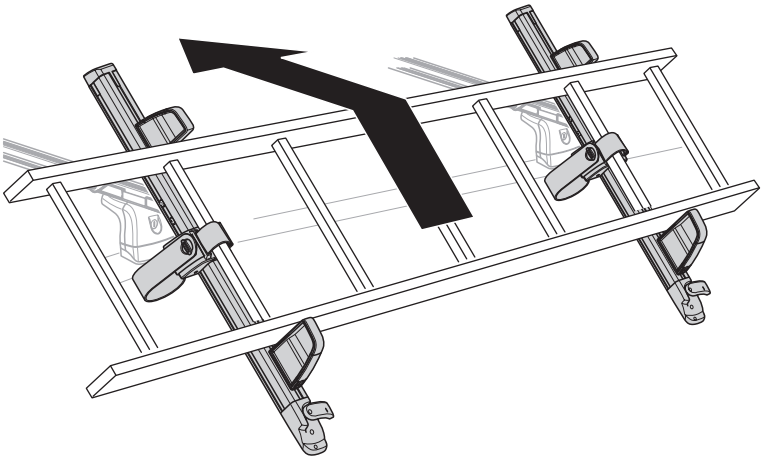

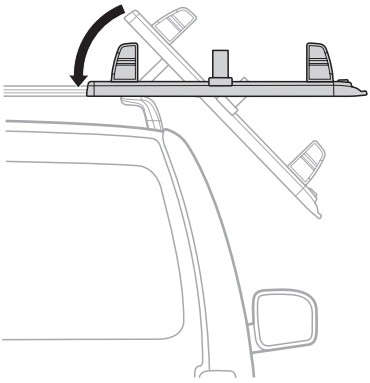

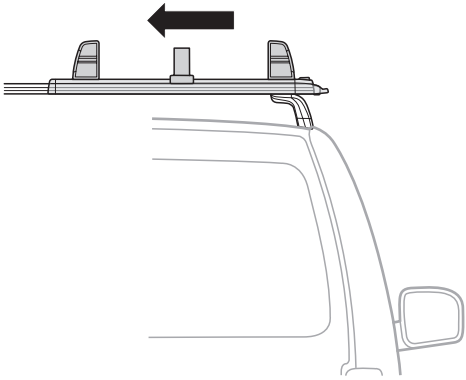

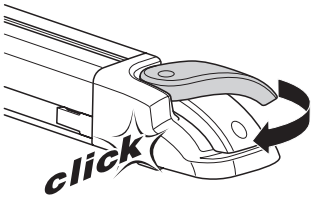

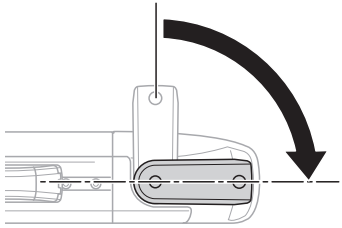

i

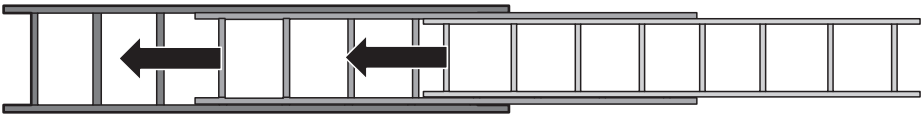

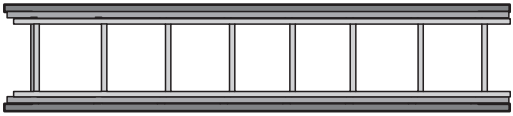

Max 3

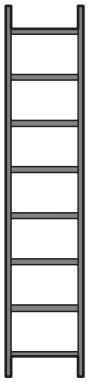

i

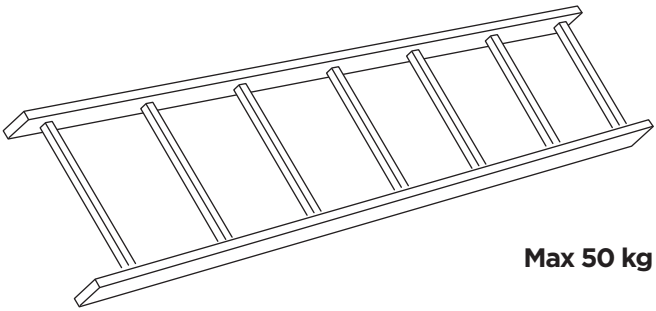

Max 50 kg

i

310



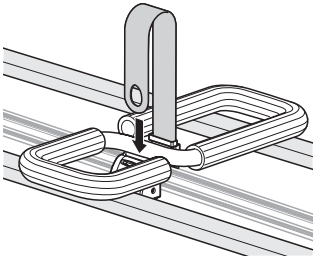

i

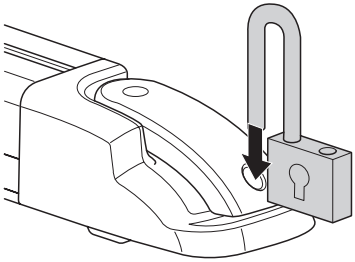

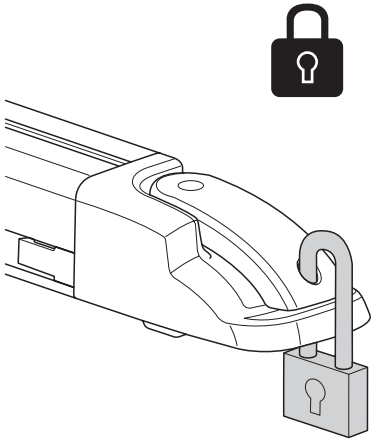

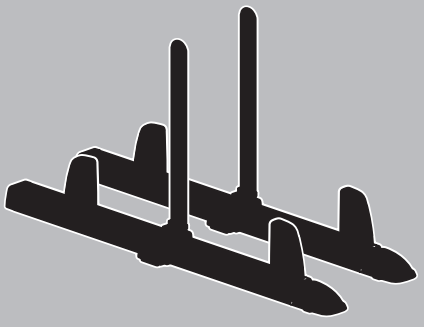

6.7 kg

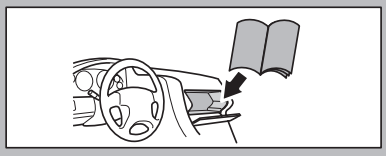

i

1.

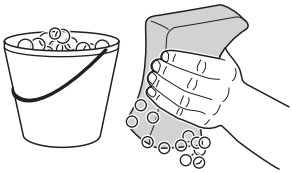

2.



3.

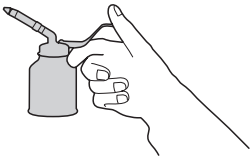

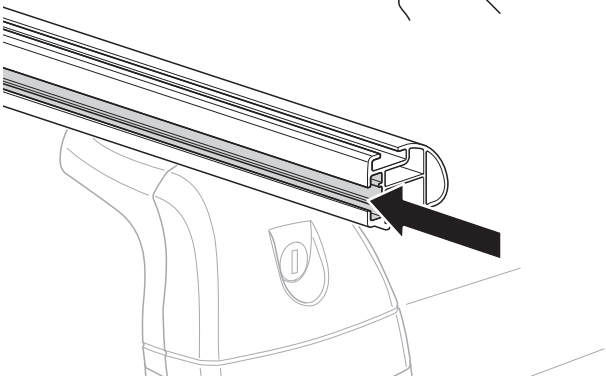

Thule Sweden AB, Box 69, 330 33 Hillerstorp, SWEDEN
info@thule.com
www.thule.com
» PART OF THULE GROUP
© Thule Group 2016. All rights reserved.
501-7171-08