› Instructions

Thule Bike Rack Around-the-bar Adapter

8898

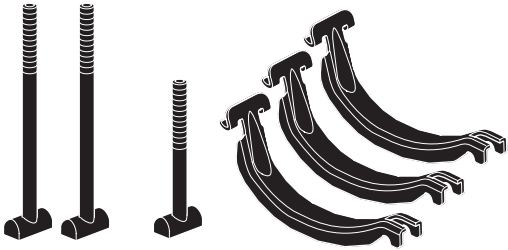



Square bars

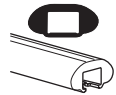

Aluminum bars

501-8315-01

Bring your life
thule.com

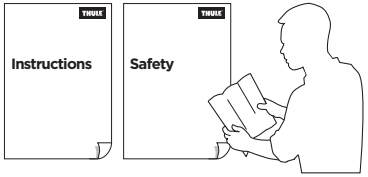

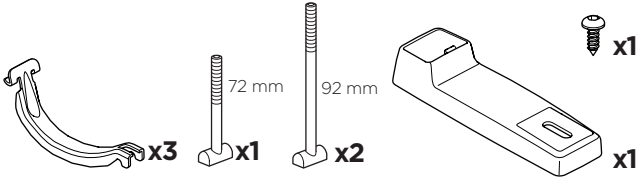

1

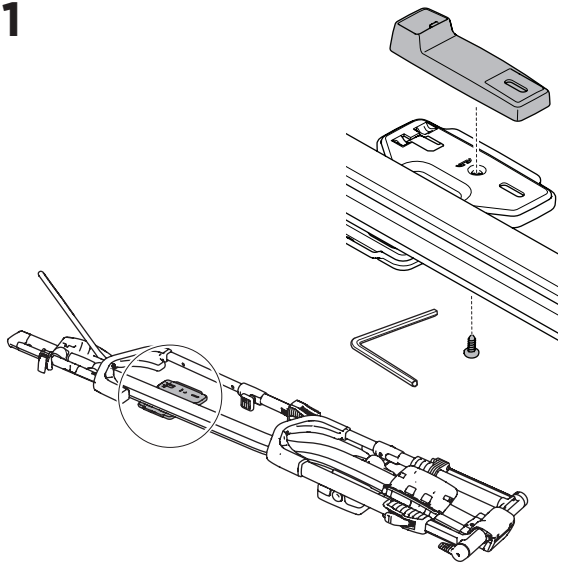

2

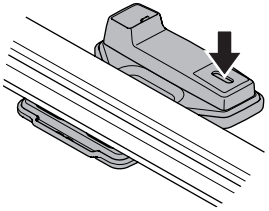

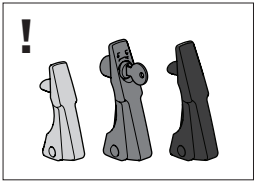

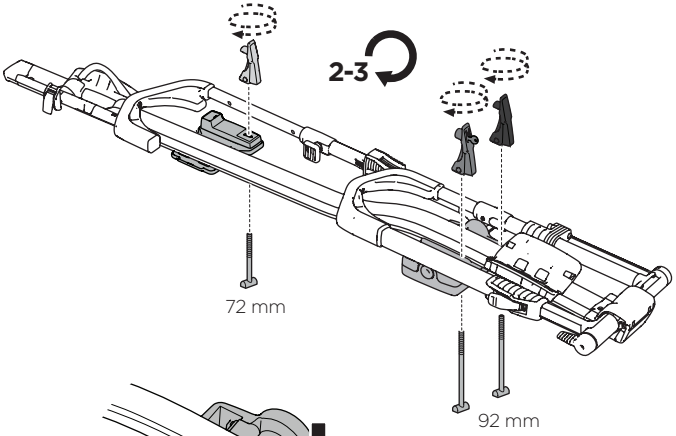

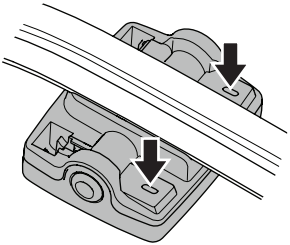

3

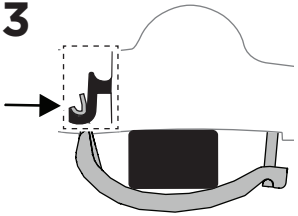

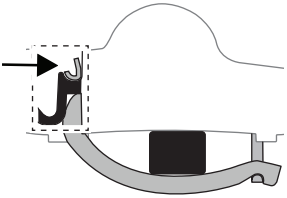

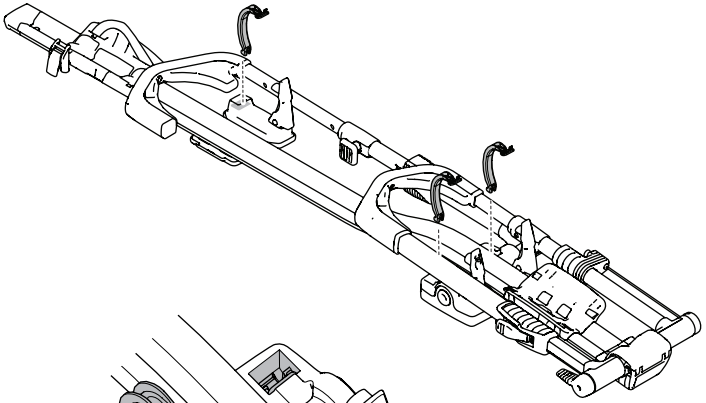

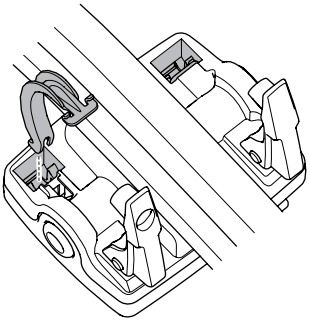

4

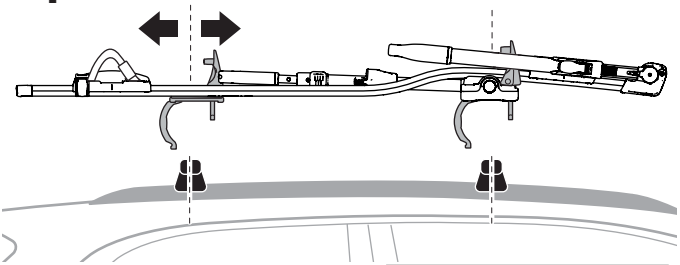

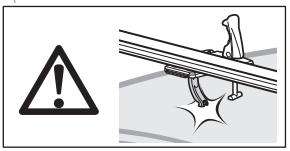

A

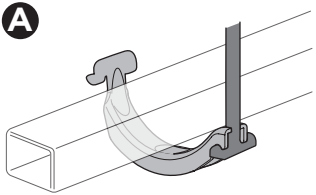

B

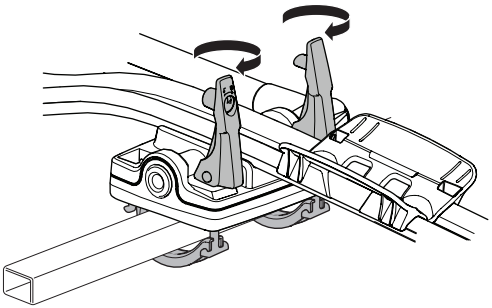

C

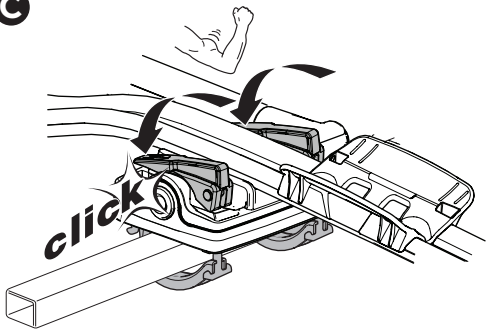

D

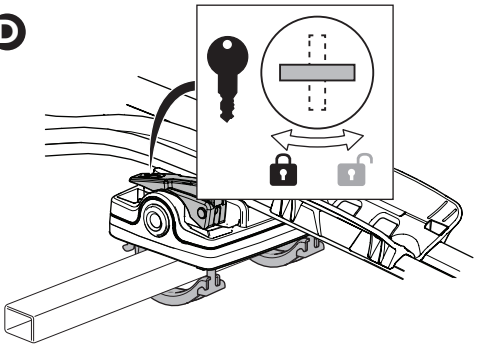

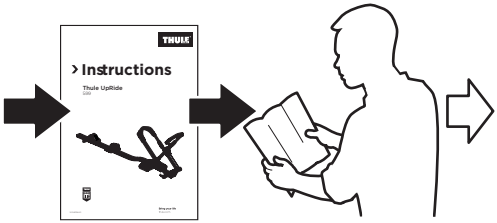
THULE
Instructions
Thule Upride

www.thule.com

info@thule.com

Thule Sweden AB, Borggatan 5
335 73 Hillerstorp, SWEDEN

501-8315-01

PART OF THULE GROUP

© Thule Group 2017. All rights reserved.