Thule Ladder Step Adapter 310

› Instructions

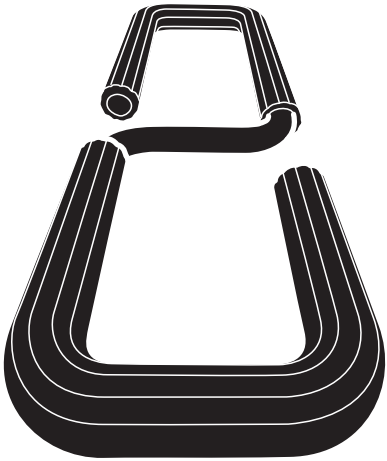

THULE
BRING IT!
GUARANTEE
THULE.COM

310000
A5/4.20160531
501-7186-04

Bring your life
thule.com

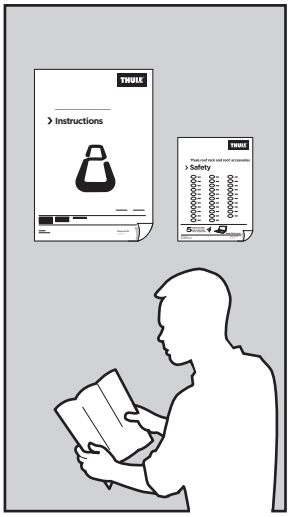
THULE
> Instructions
THULE
> Safety

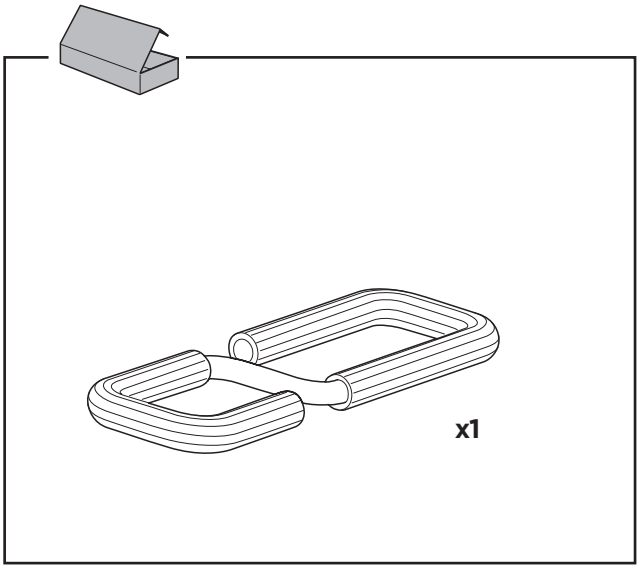
x1

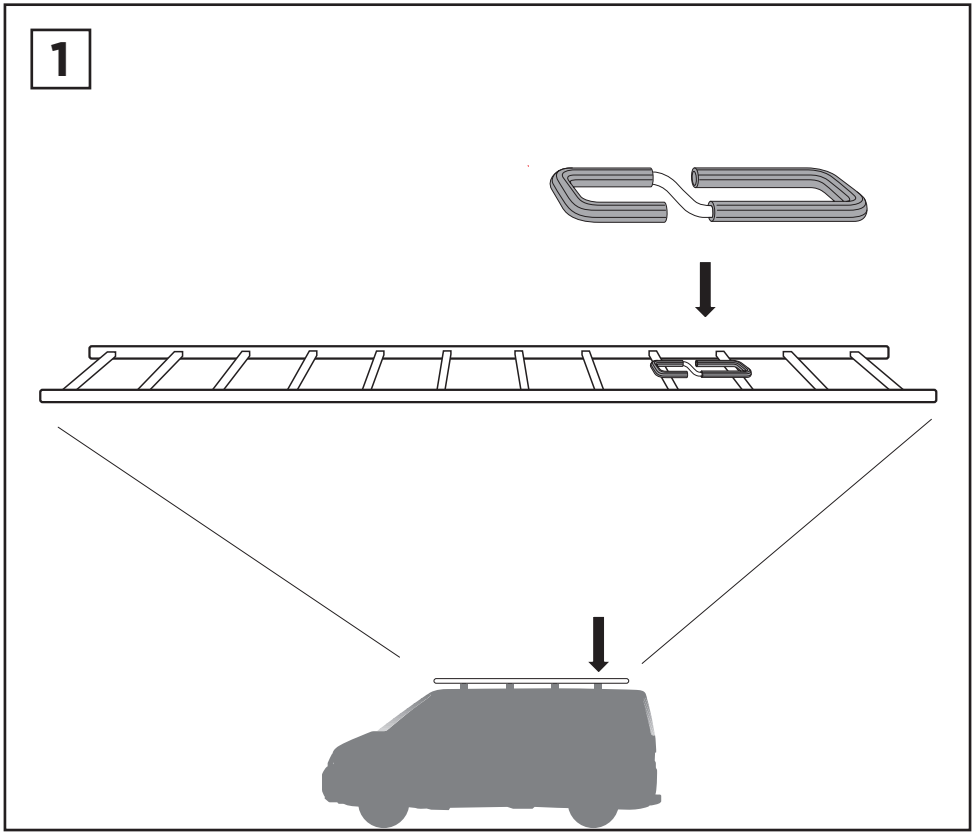
1

2

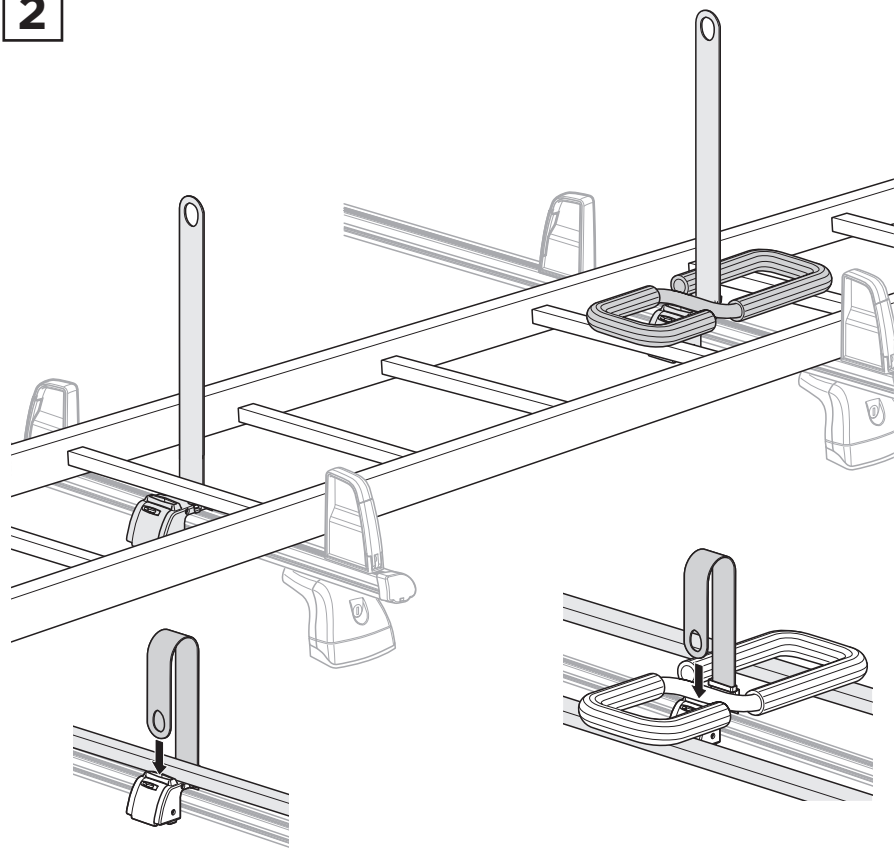

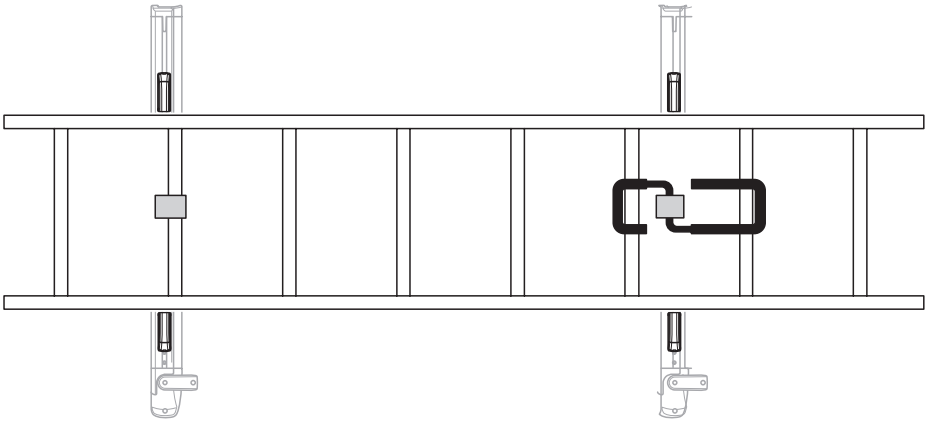

3

ok

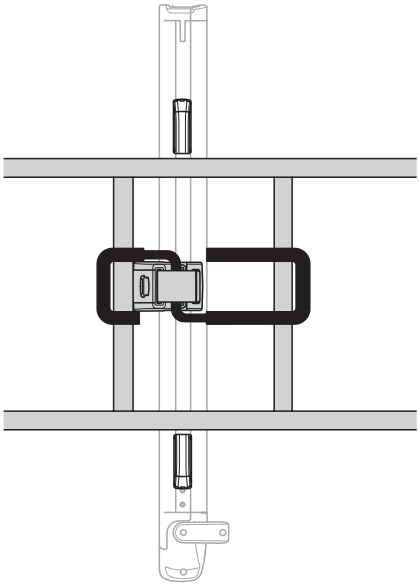

Not ok

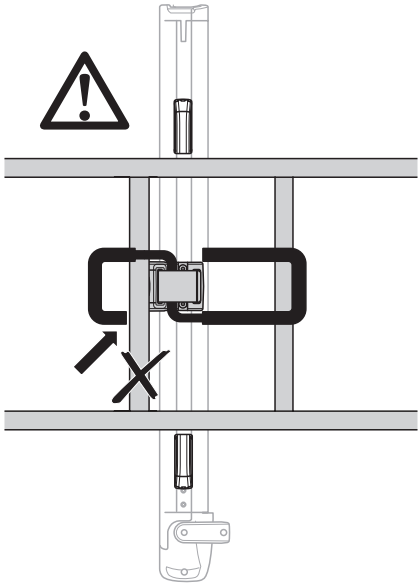



920 g

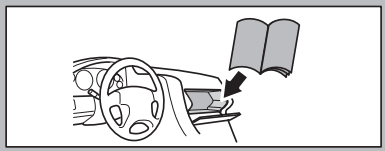

Thule Sweden AB, Box 69, 330 33 Hillerstorp, SWEDEN

info@thule.com

www.thule.com

» PART OF THULE GROUP

© Thule Group 2016. All rights reserved.