1 Kit 5015

VOLKSWAGEN Polo (Mk V.), 5-dr Hatchback, 09-17

ISO 11154-E

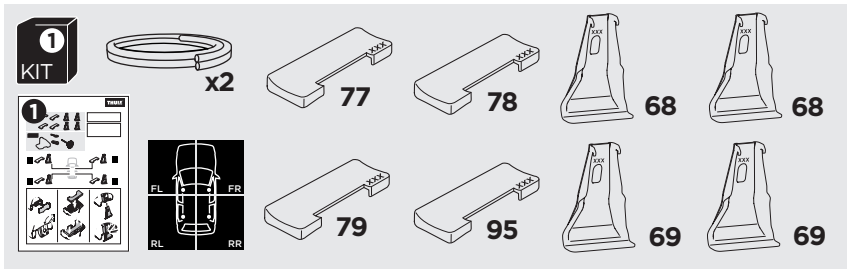

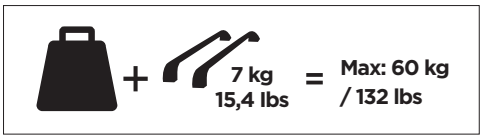

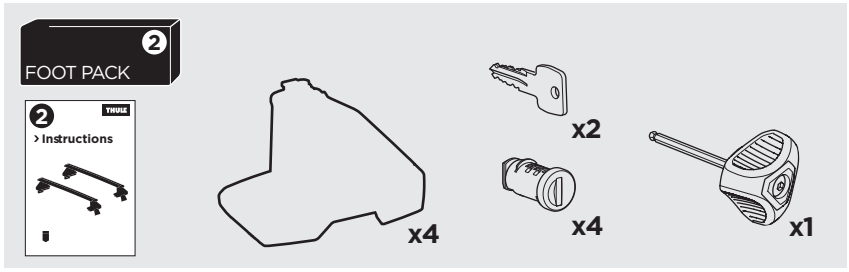

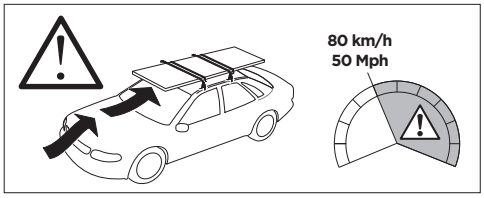

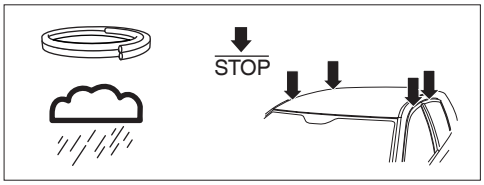

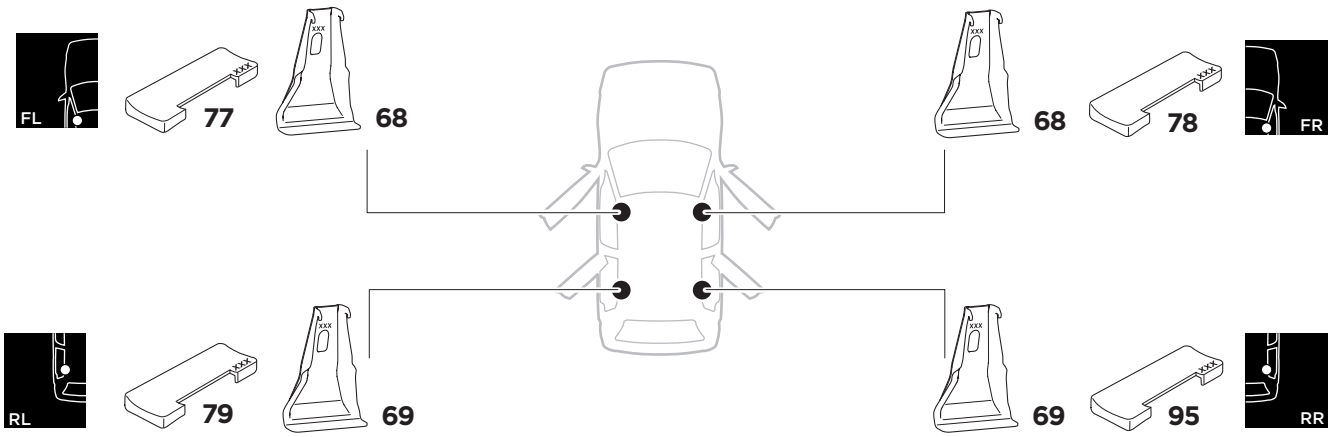

1



x4

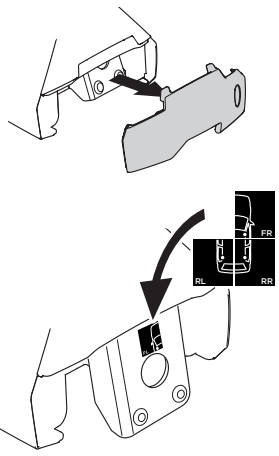

2

x4

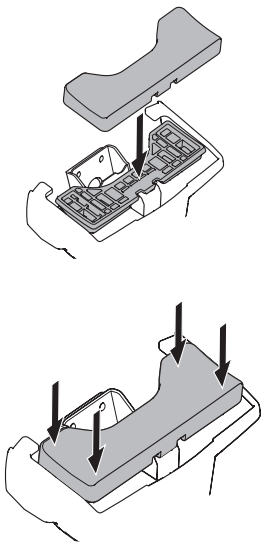

3

x4

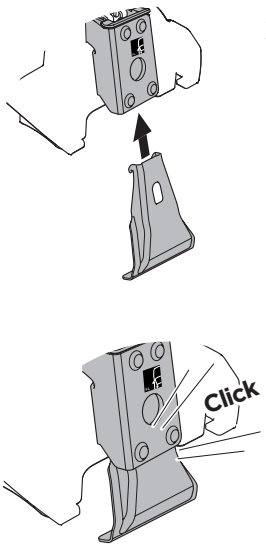



2

521-5015-01

Bring your life
thule.com

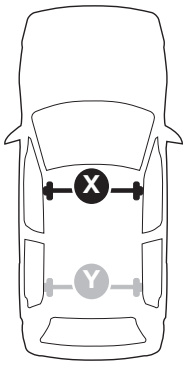

THULE WingBar Evo	THULE WingBar Edge	THULE WingBar	THULE SquareBar	Evo X (scale)	Edge X (scale)
VOLKSWAGEN Polo (Mk V.), 5-dr Hatchback, 09-17				**41**	**O**

THULE ProBar	THULE SlideBar	X (mm/inch)
VOLKSWAGEN Polo (Mk V.), 5-dr Hatchback, 09-17		**1061 mm / 41 3/4“**

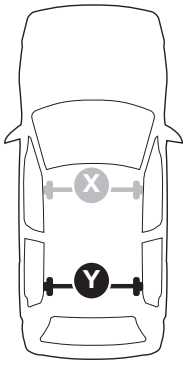

THULE WingBar Evo	THULE WingBar Edge	THULE WingBar	THULE SquareBar	Evo Y (scale)	Edge Y (scale)
VOLKSWAGEN Polo (Mk V.), 5-dr Hatchback, 09-17				**36**	**G**

THULE ProBar	THULE SlideBar	Y (mm/inch)
VOLKSWAGEN Polo (Mk V.), 5-dr Hatchback, 09-17		**1011 mm / 39 3/4“**

	W (mm/inch)	Z (mm/inch)
VOLKSWAGEN Polo (Mk V.), 5-dr Hatchback, 09-17	**795 mm / 31 1/4“**	**175 mm / 6 7/8“**

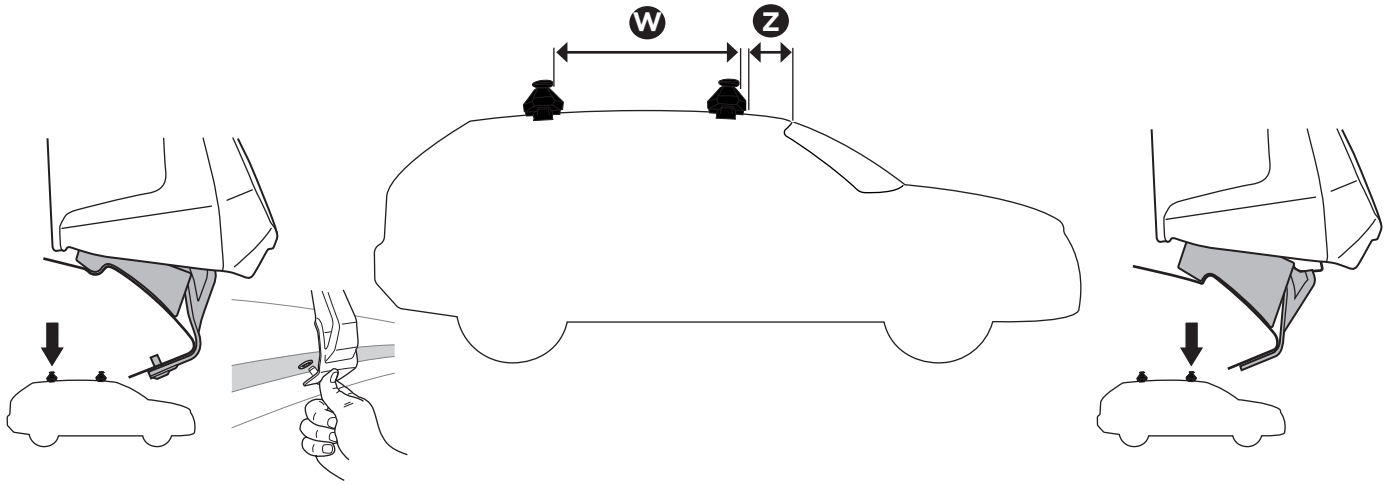

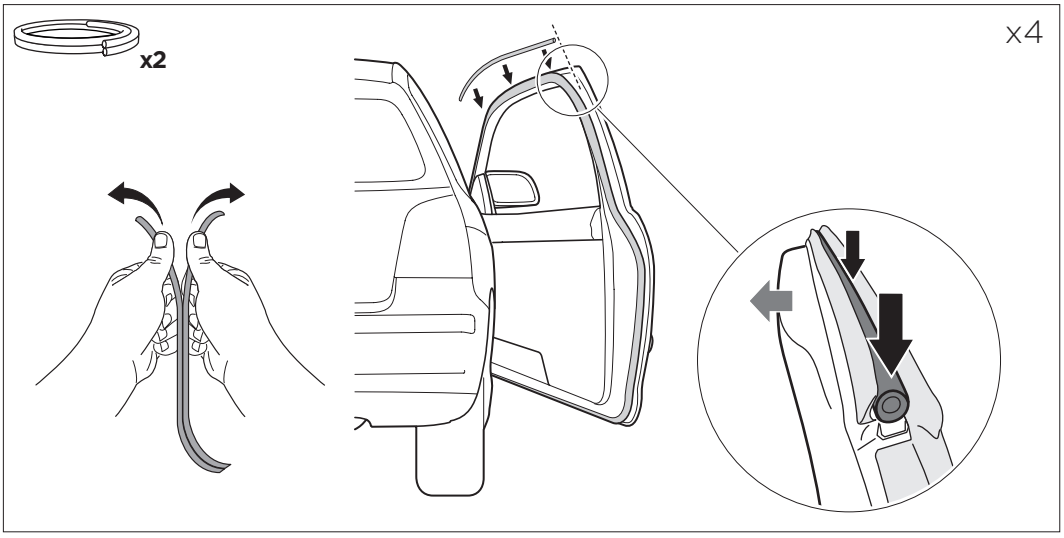



2

Thule Sweden AB, Borggatan 5
335 73 Hillerstorp, SWEDEN
» PART OF THULE GROUP

info@thule.com

www.thule.com

© Thule Group 2018. All rights reserved.