Thule Load Stop 314

› Instructions



+



THULE
BRING IT!
GUARANTEE
THULE.COM

314000
A5/4.20160821
501-7125-05

Bring your life
thule.com

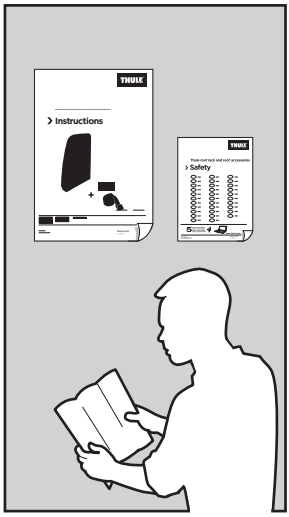
THULE
› Instructions
THULE
› Safety

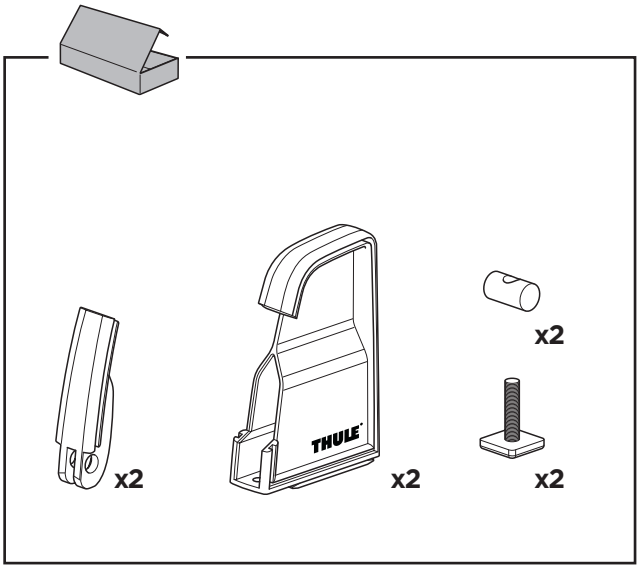
x2
THULE
x2
x2
x2

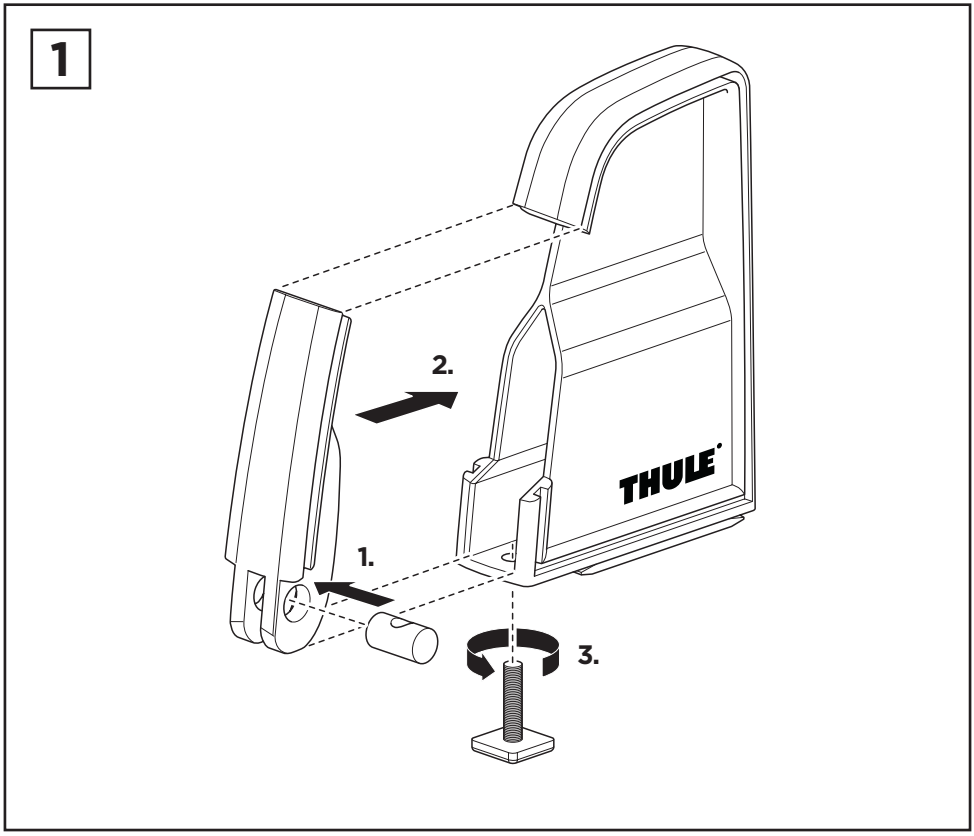
1
2.
1.
3.
THULE

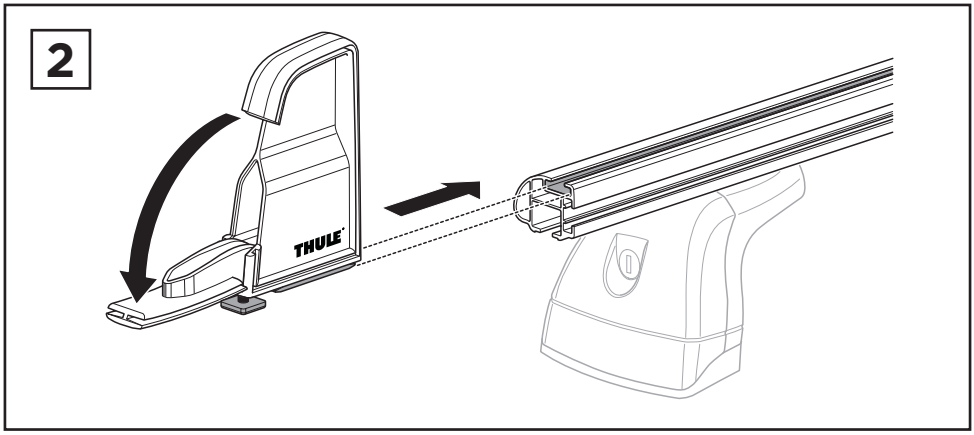
2
THULE

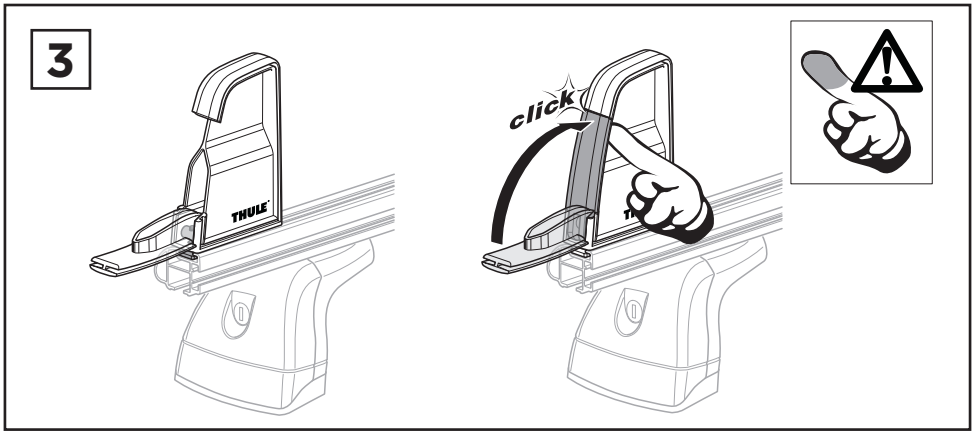
3
THULE
click

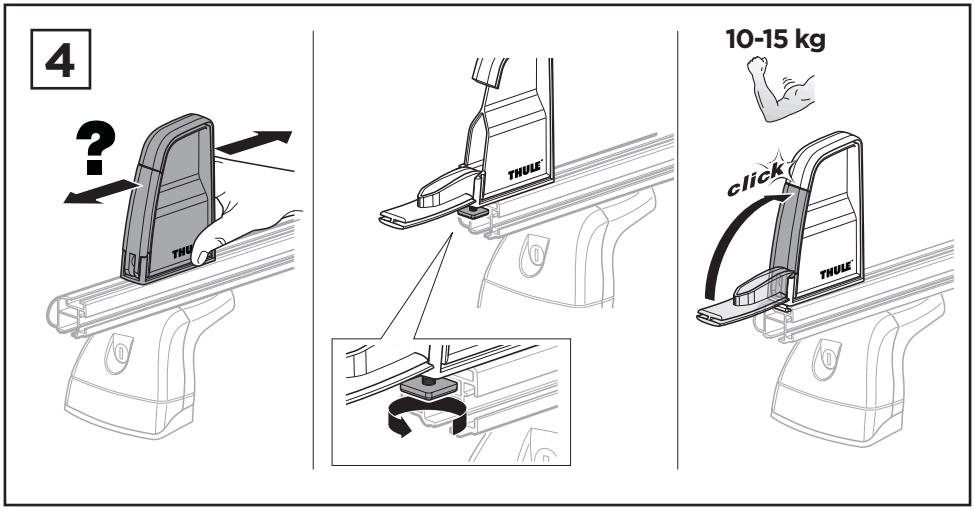
4
?
THULE
10-15 kg
click

5

323



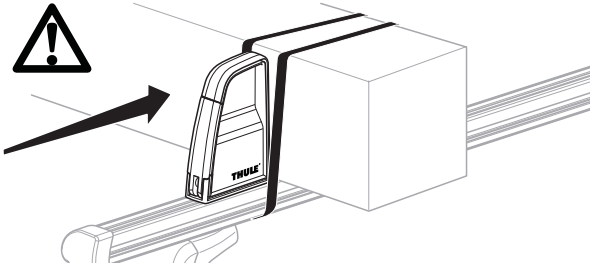

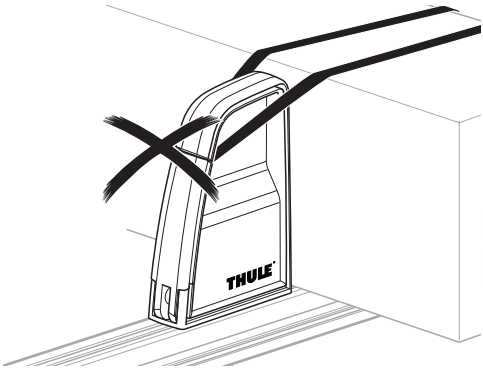

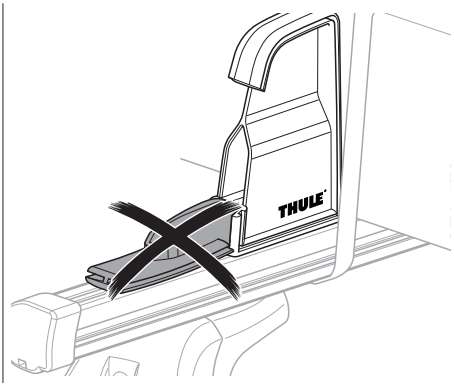

i

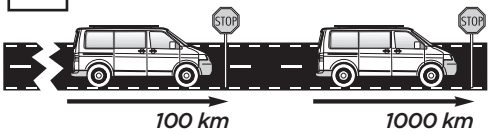

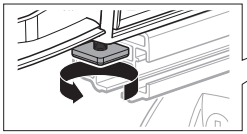

10-15 kg

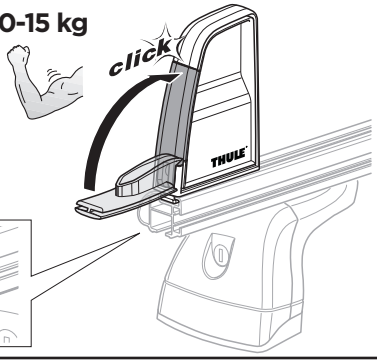



380 g

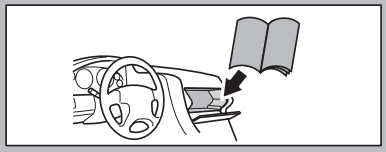

Thule Sweden AB, Box 69, 330 33 Hillerstorp, SWEDEN
info@thule.com
www.thule.com
» PART OF THULE GROUP
© Thule Group 2016. All rights reserved.