Thule EuroWay G2

920, 922

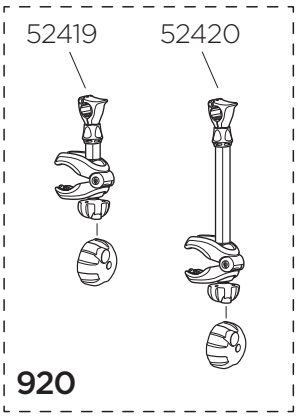

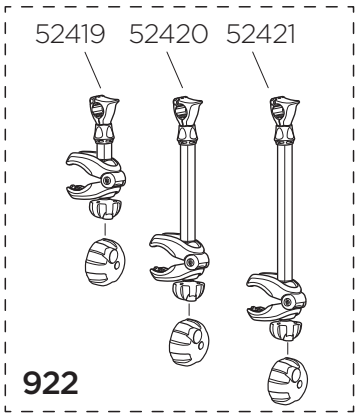

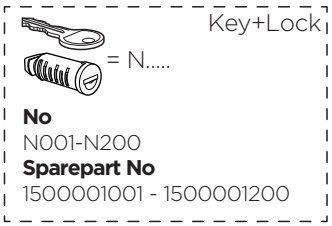

+

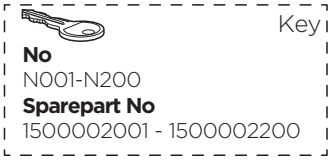

920020 2 x

922020 3 x

