› Instructions

Thule Caprock rail mount 181004



THULE GUARANTEE
THULE.COM

5564362001

Bring your life
thule.com

TOYOTA Tacoma Crew Cab (Mk.II), 4-dr Pickup. 05-15
TOYOTA Tacoma Crew Cab (Mk.III), 4-dr Pickup. 16-23

7.9 kg
17.4 lbs

Instructions
Thule Caprock
rail mount

Instructions
Thule Caprock

Safety

x 1

x 1

x 1

x 12

x 12

x 8

x 8

5 mm
¼"

x 1

x 2

Max
100 Kg /220 lbs

1

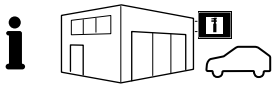

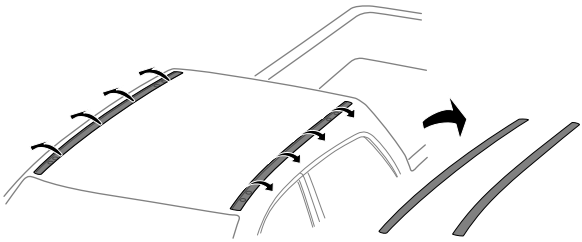

A

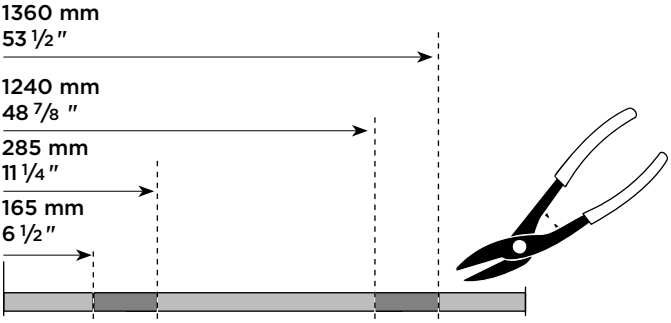
1360 mm
53 1/2 "
1240 mm
48 7/8 "
285 mm
11 1/4 "
165 mm
6 1/2 "

B

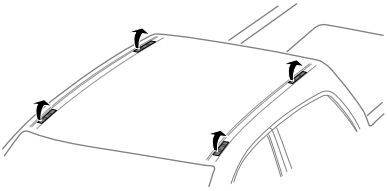

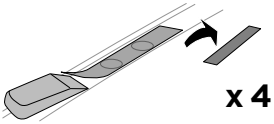
x 4

C

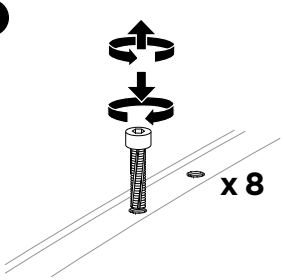
x 8

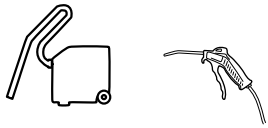

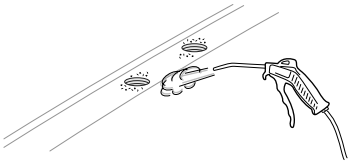



D

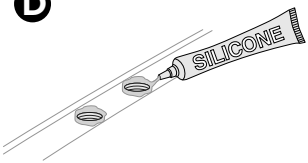
SILICONE


SILICONE

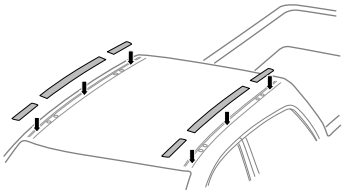

2

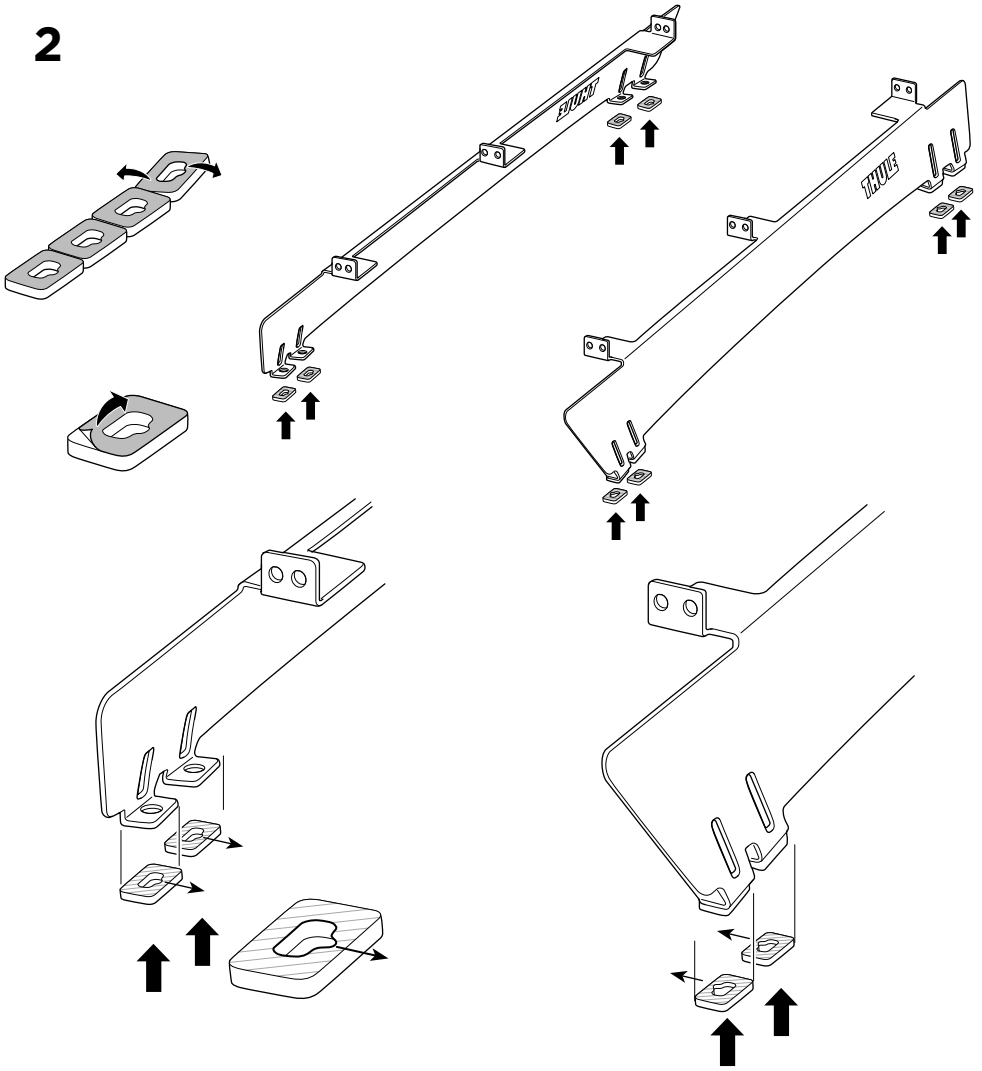

3

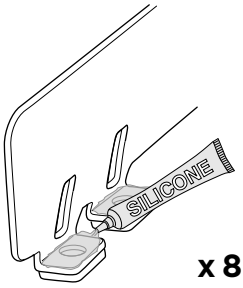

x 8



4

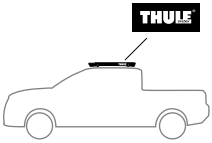

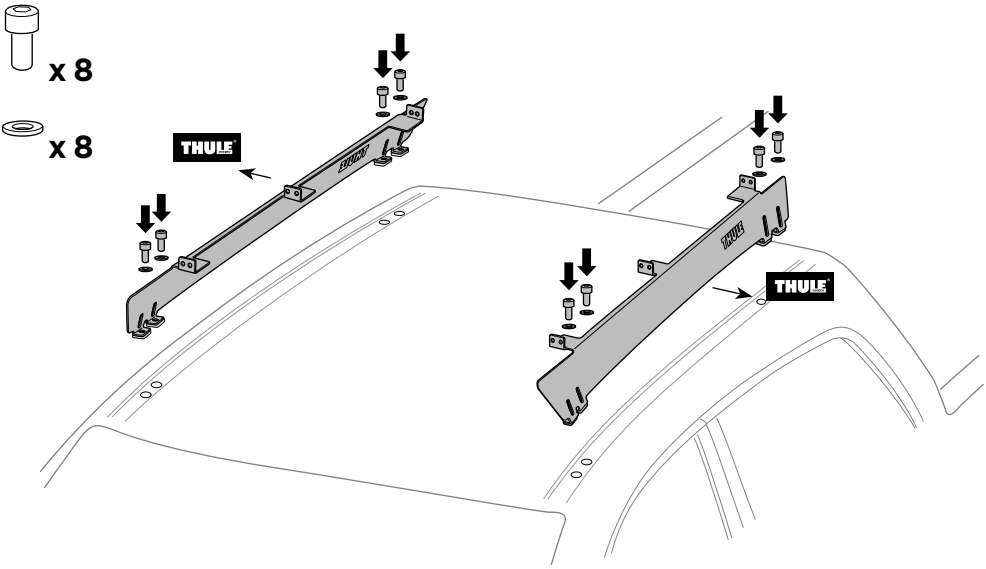

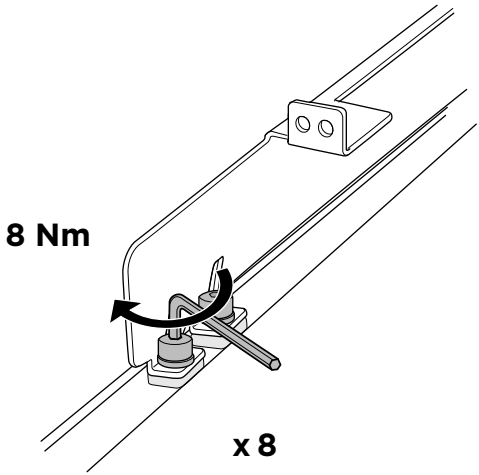

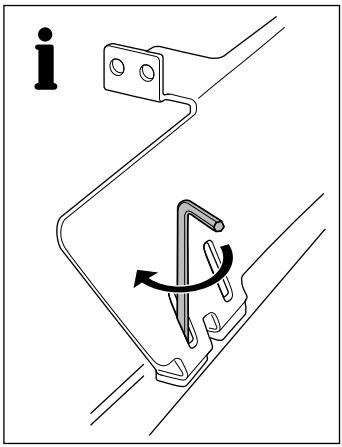

5

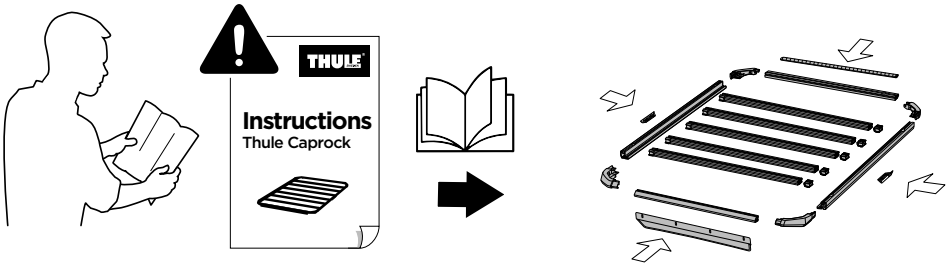

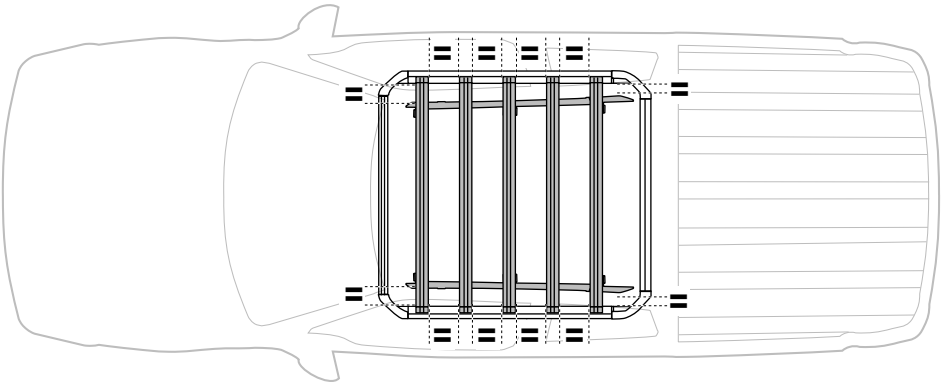

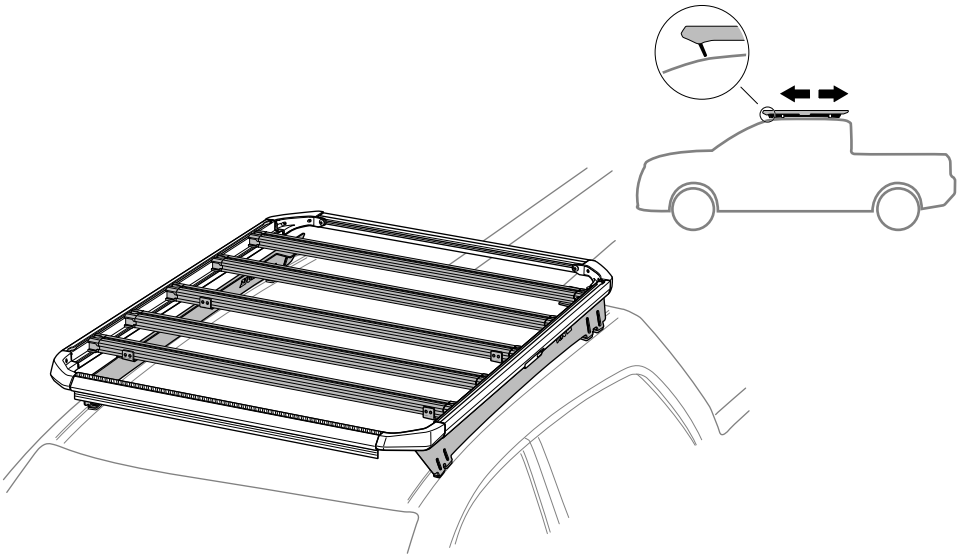

6

x 12

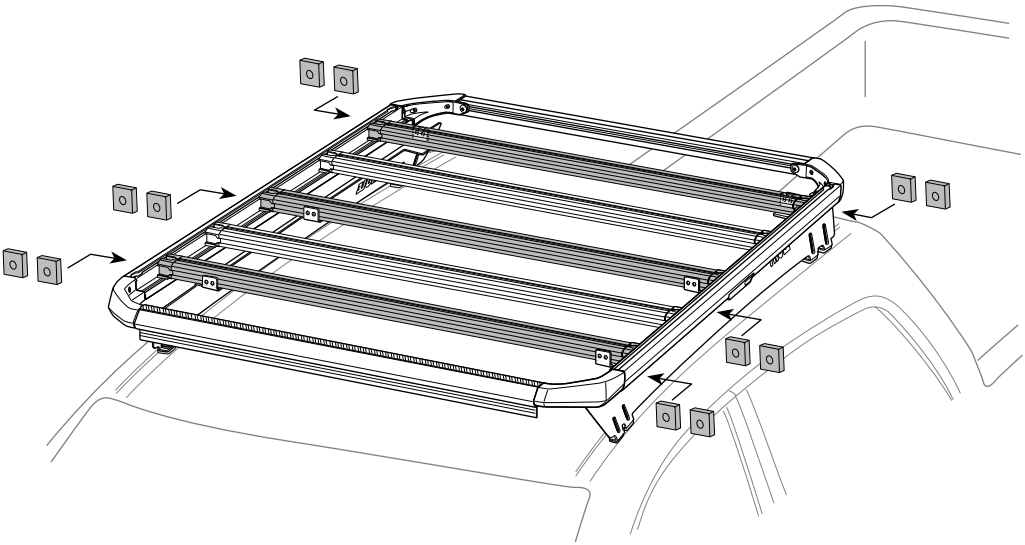

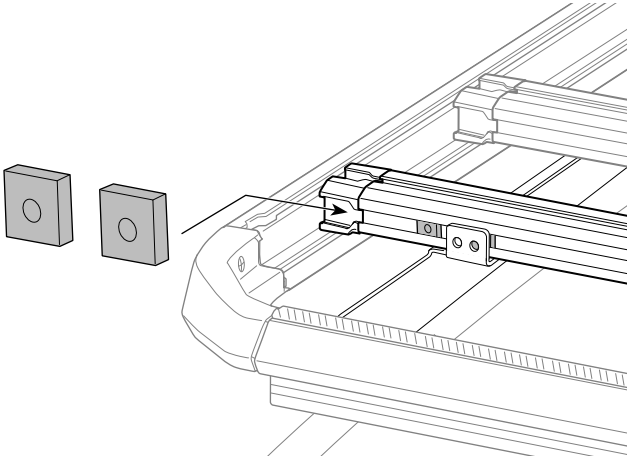

7

x 12

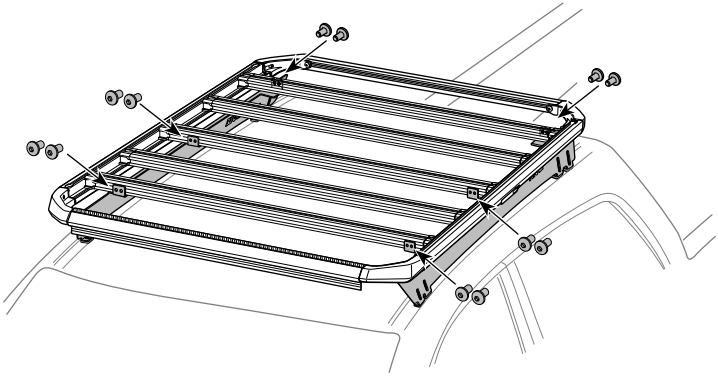

15 Nm

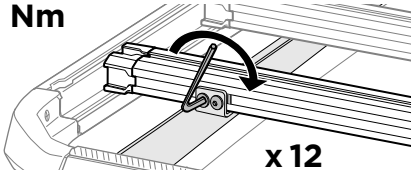

x 12

8



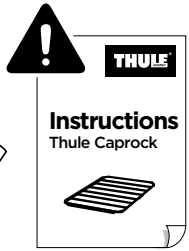

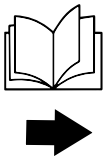

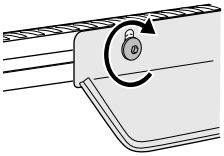

15 Nm

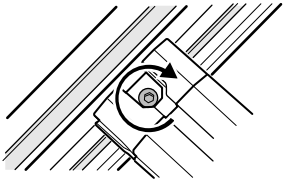

15 Nm

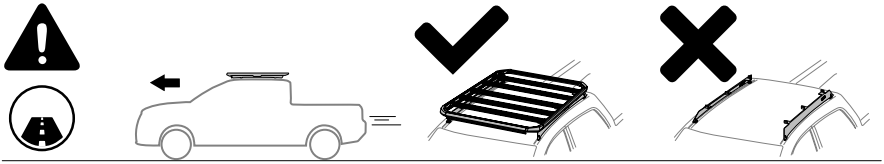

Thule Sweden AB. Borggatan 5, 335 73 Hillerstorp, SWEDEN
info@thule.com | *www.thule.com*

Thule Inc. 42 Silvermine Road, Seymour, CT 06483
Thule Canada Inc. 710 Bernard, Granby QC J2J 0H6
North American Consumer Service:
Toll Free 800-238-2388, Fax 450-777-3615
www.thule.com

Register online at:
www.thule.com/register

© Thule Group. All rights reserved.
5564362001 | 2024-12-20 #00

» PART OF THULE GROUP