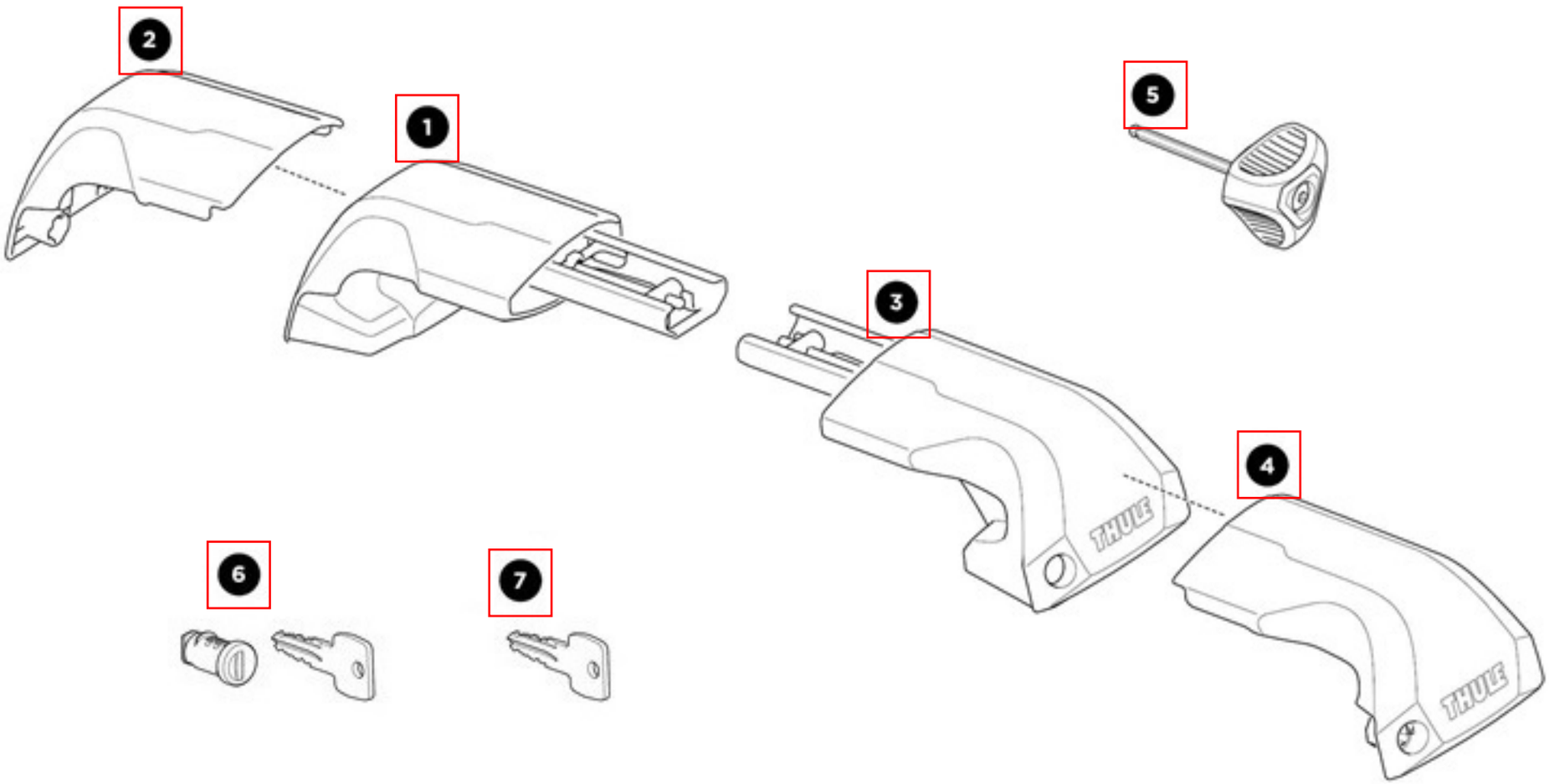
2
1
5
3
4
6
7
THULE
THULE

Alkatrész	SKU
1. Complete Foot Left	1500054247
2. Front Cover Left	1500054245
3. Complete Foot Right	1500054248
4. Front Cover Right	1500054246
5. Torque Key 4Nm	1500052988
6. Lock Cylinder	Go to "Keys & Locks"
7. Key	Go to "Keys & Locks"