Thule Front Load Stop 321, 322

› Instructions

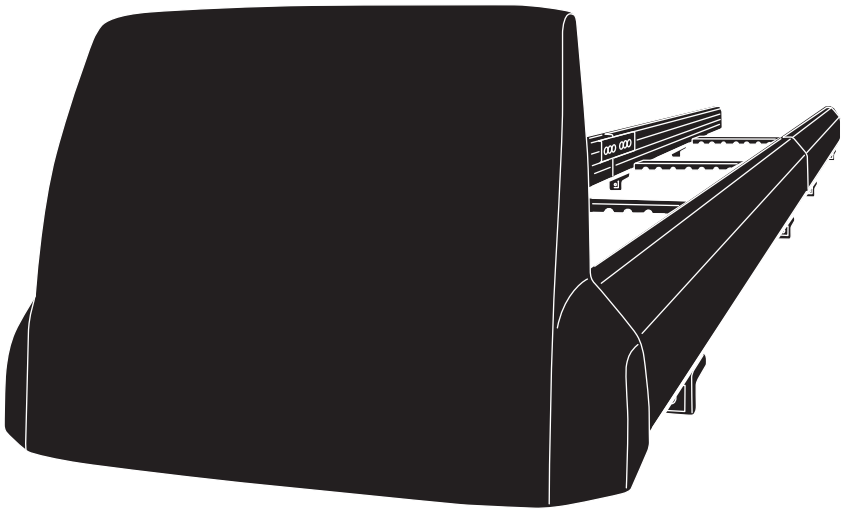

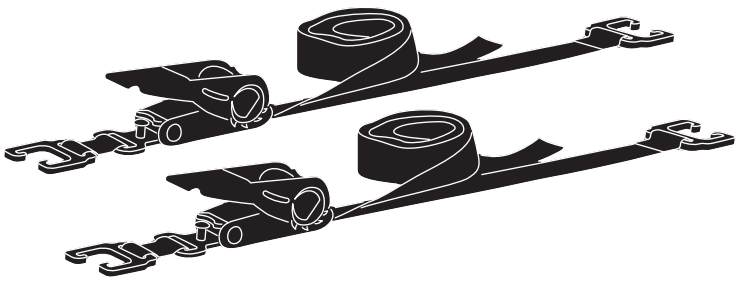

THULE.COM

www.tuv.com
ID 1000000000

321000, 322000

A4/8.20160531

501-7219-06

Bring your life

thule.com

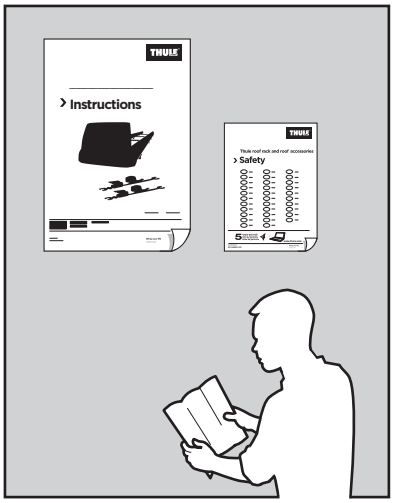
THULE
› Instructions
THULE
Thule roof rack and roof accessories
› Safety

321

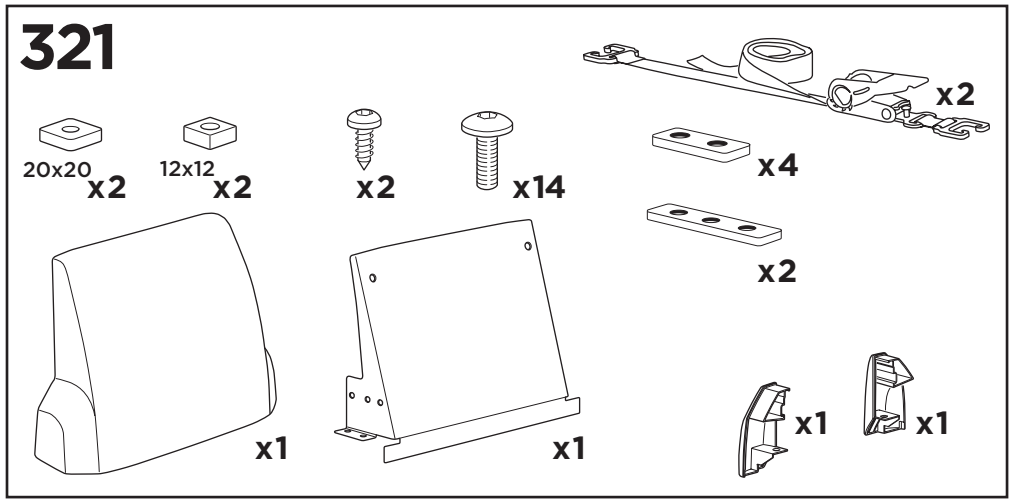
20x20
x2
12x12
x2
x2
x14
x2
x4
x2
x1
x1
x1
x1

322

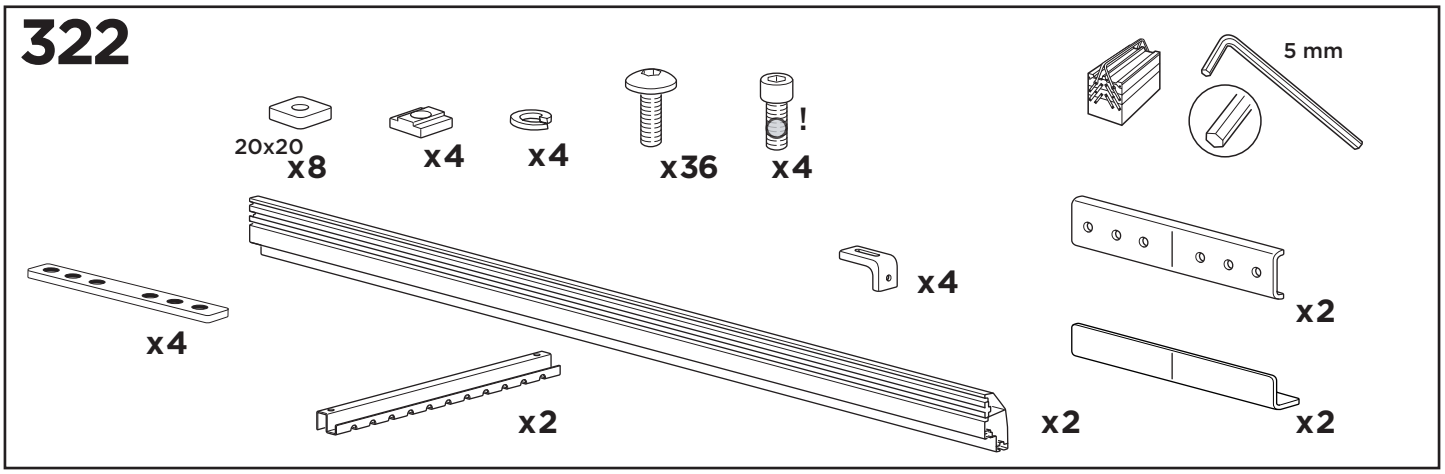
20x20
x8
x4
x4
x36
!
x4
5 mm
x4
x4
x2
x2
x2
x2
x2

1

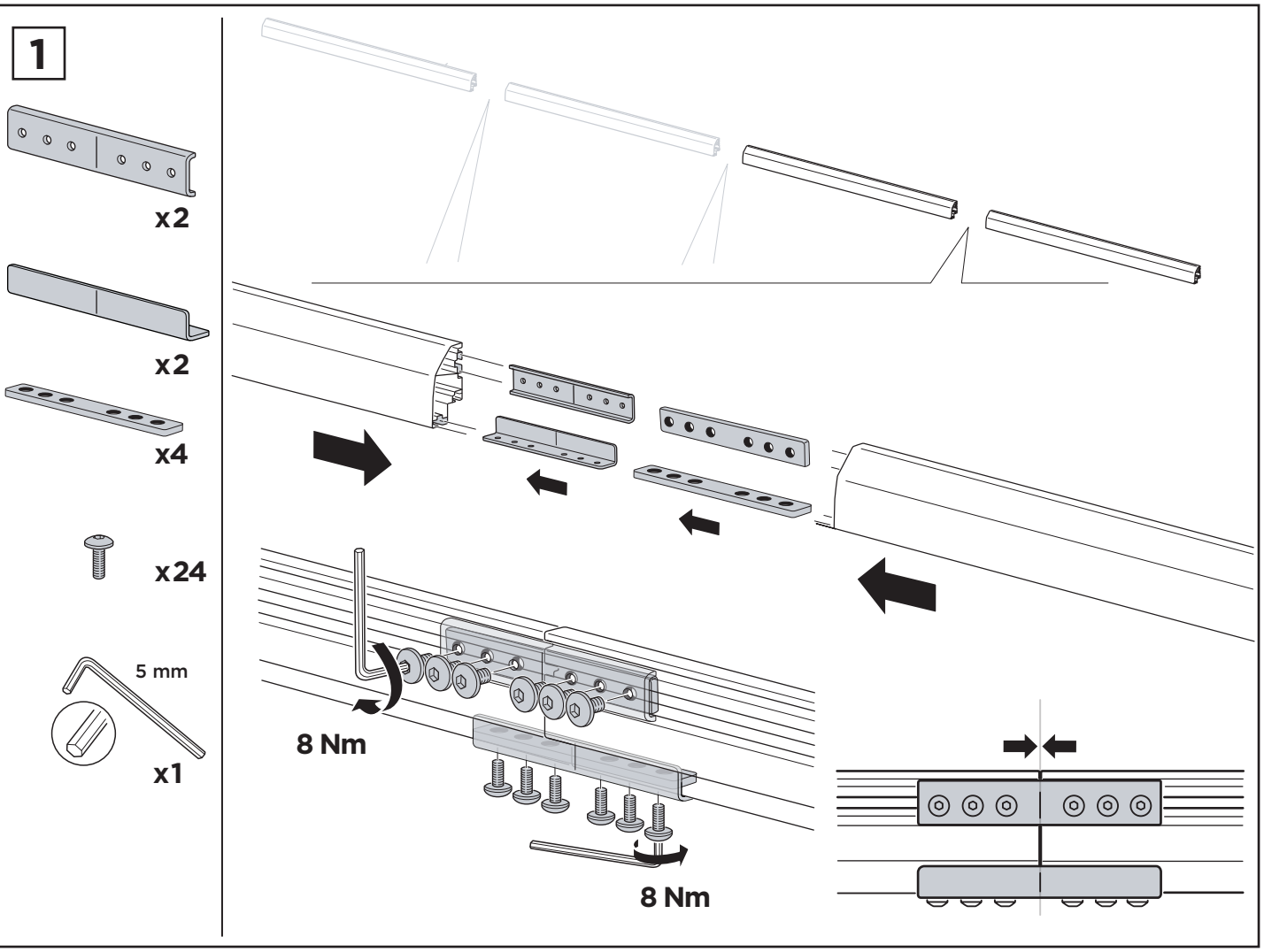
x2
x2
x4
x24
5 mm
x1
8 Nm
8 Nm

2

x2

x2

x4

12x12

x4

5 mm

x1

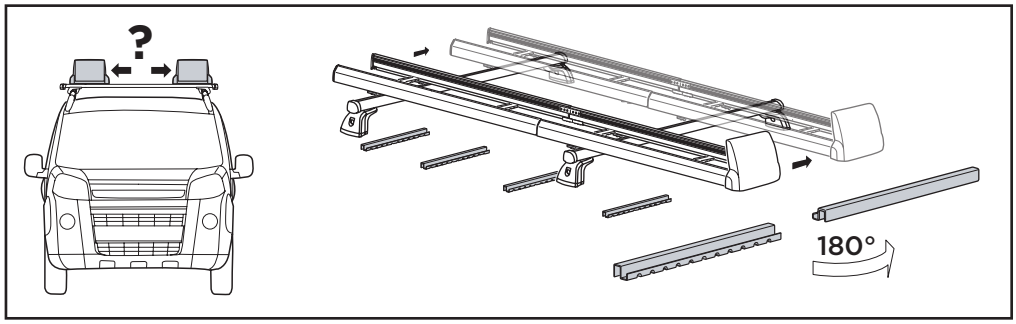

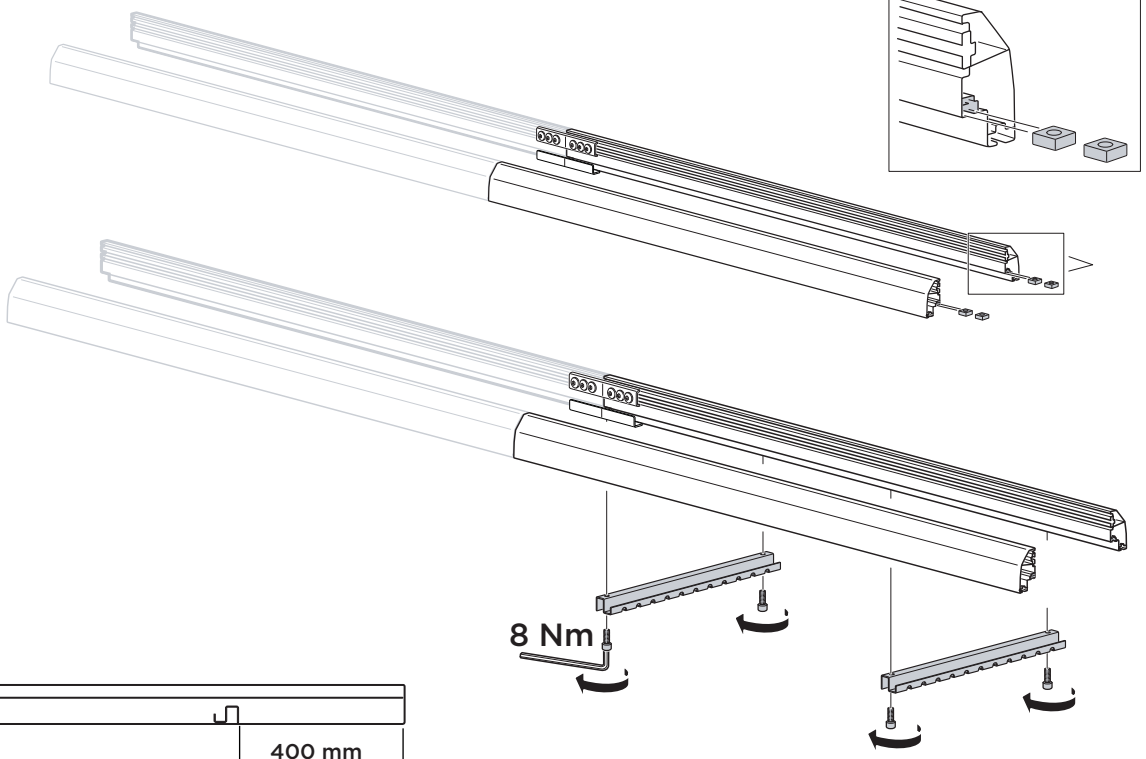

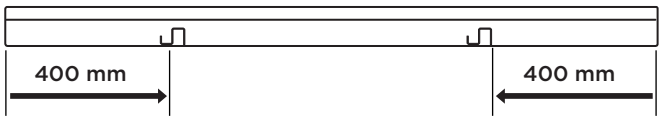

3

20x20

x8

x4

x8

x1

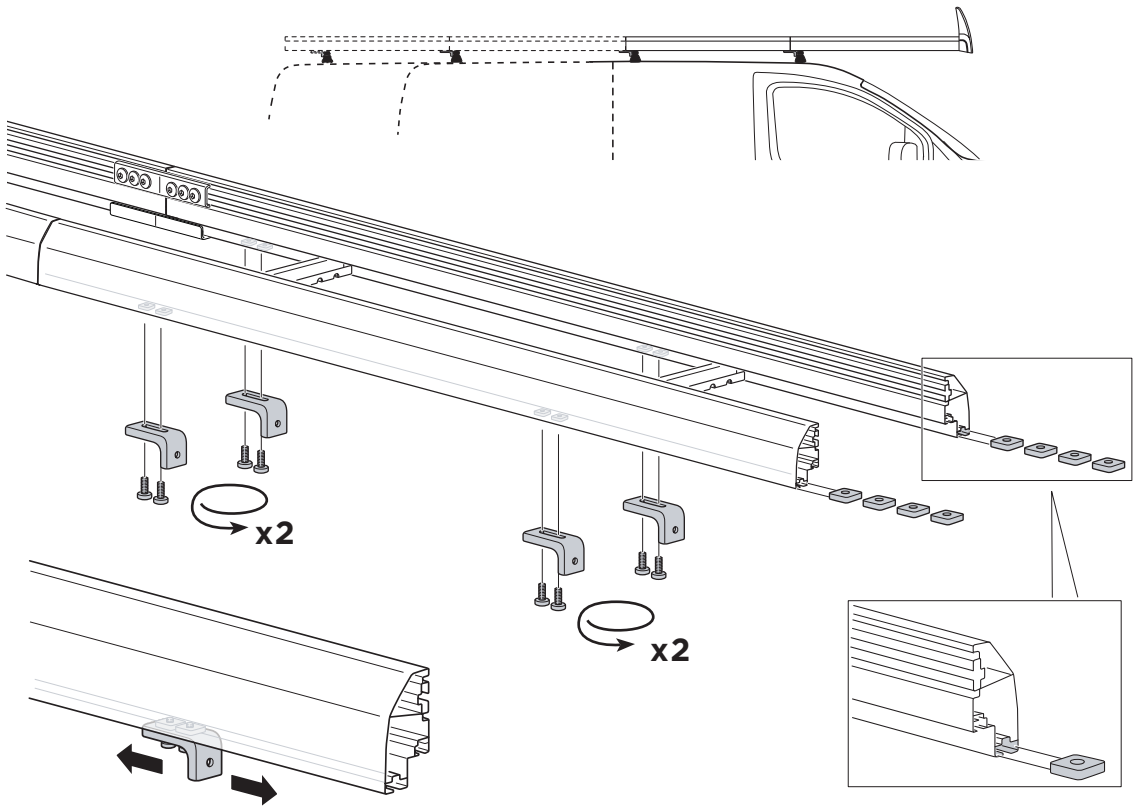

4

x10

x4

x4

5 mm

x1

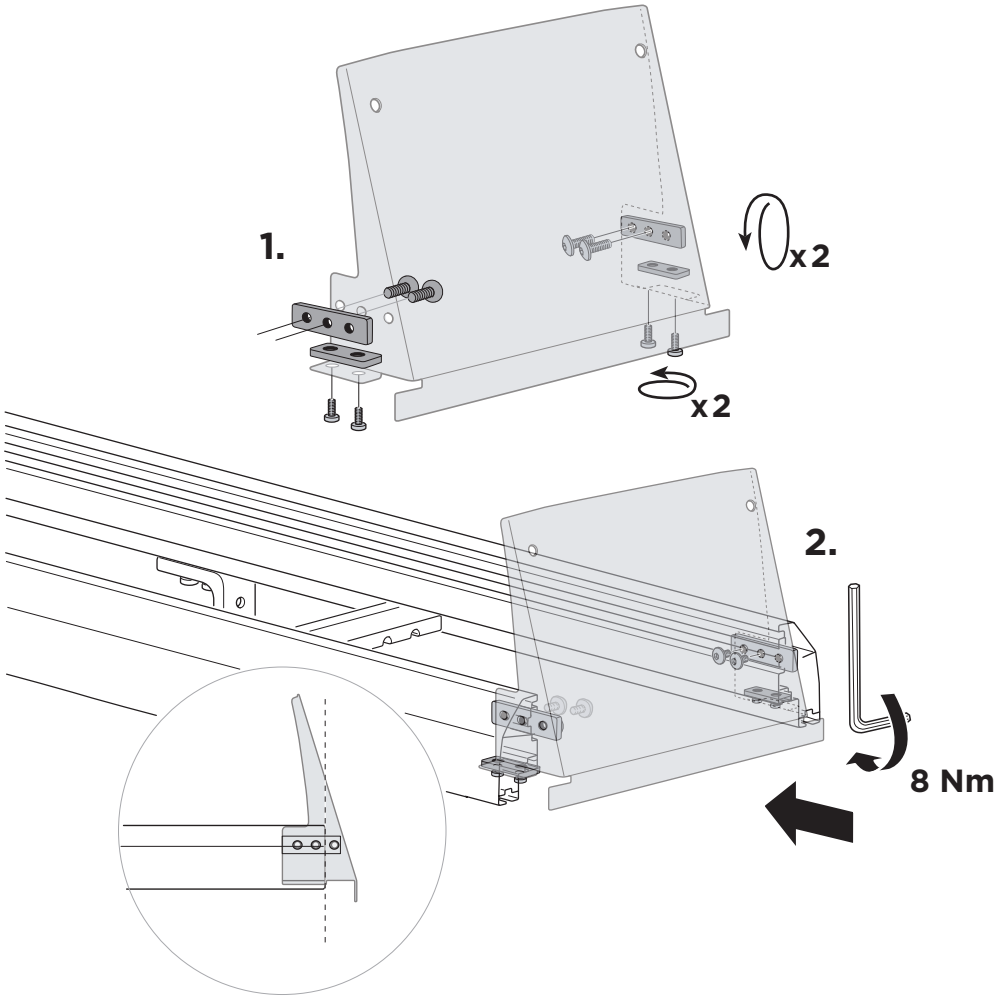

5

x2

x4

x2

x1

5 mm

x1

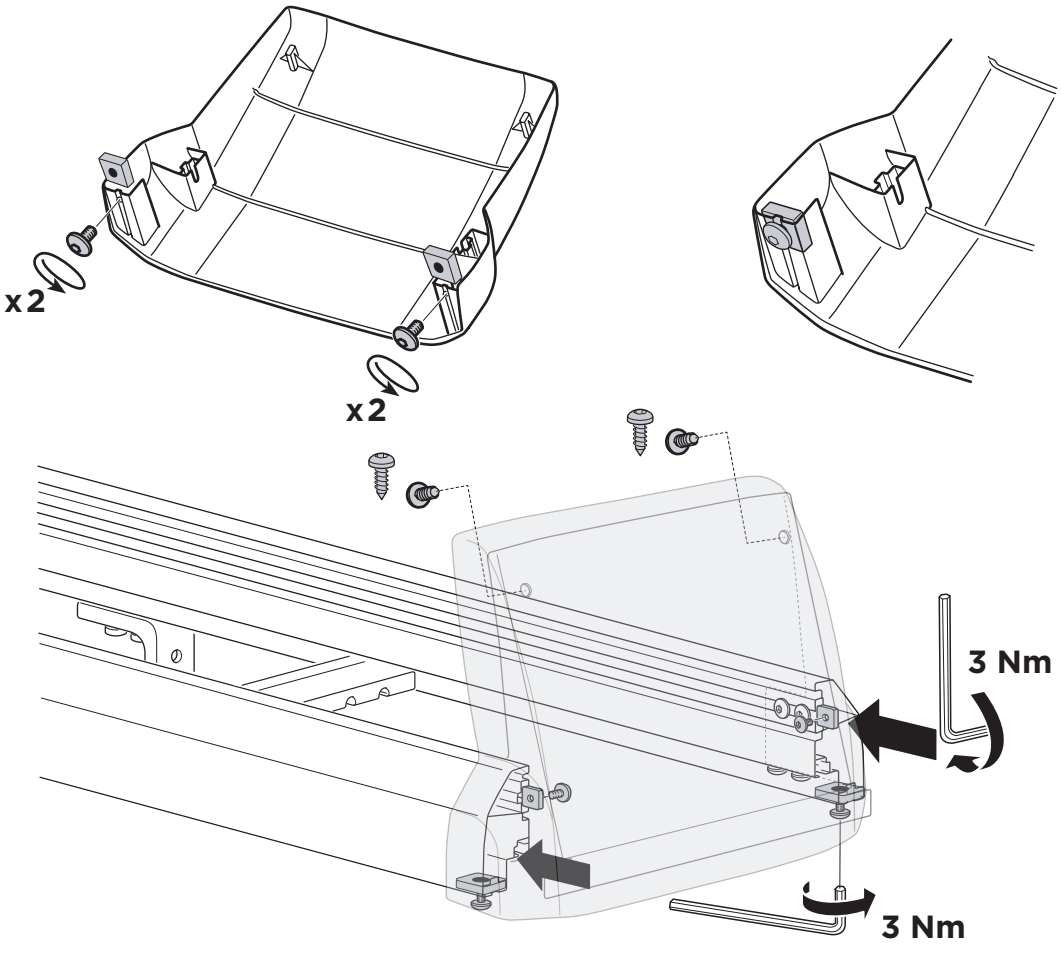

6

x2

12x12 x2

x1

x1

5 mm

x1

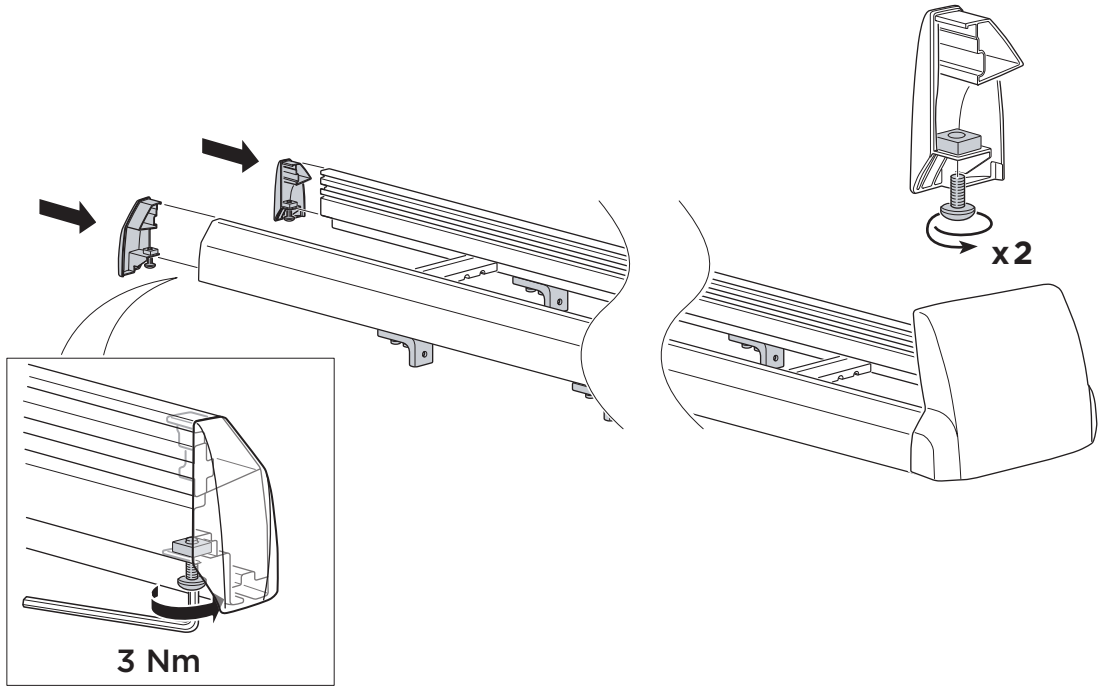

7

x4

x4

x4

5 mm

x1

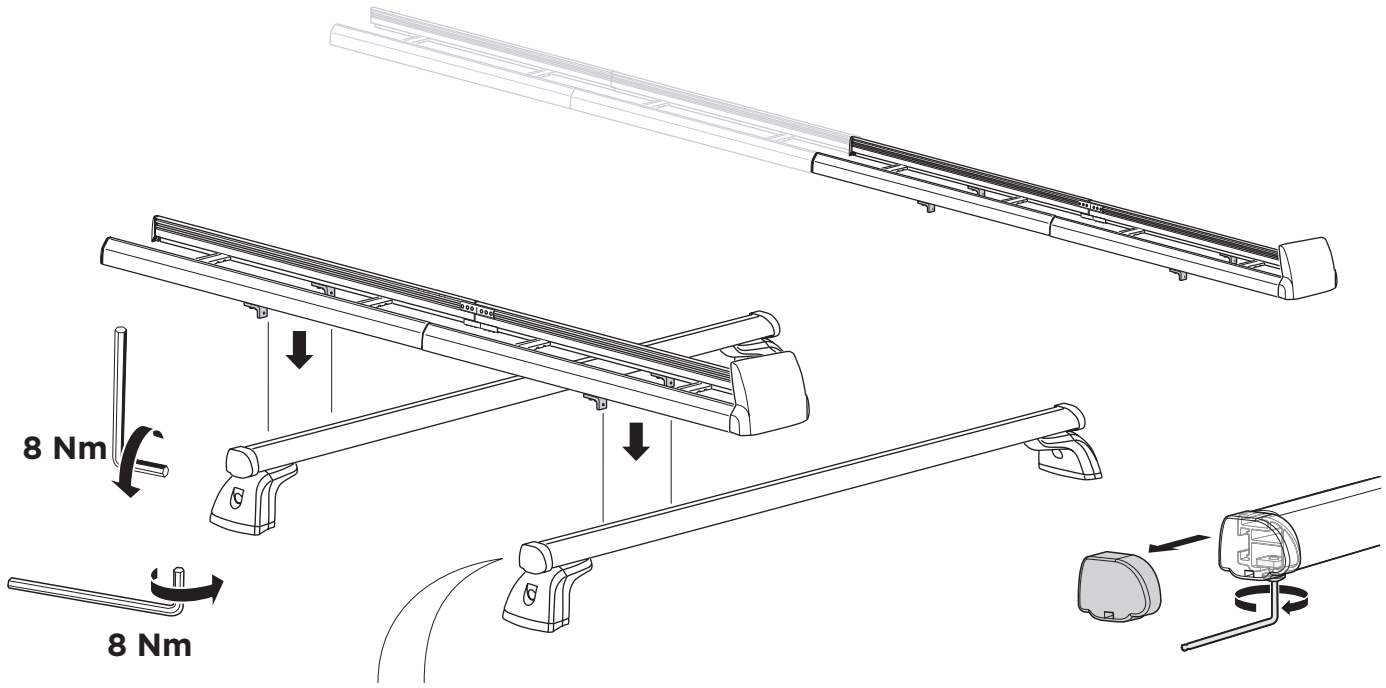

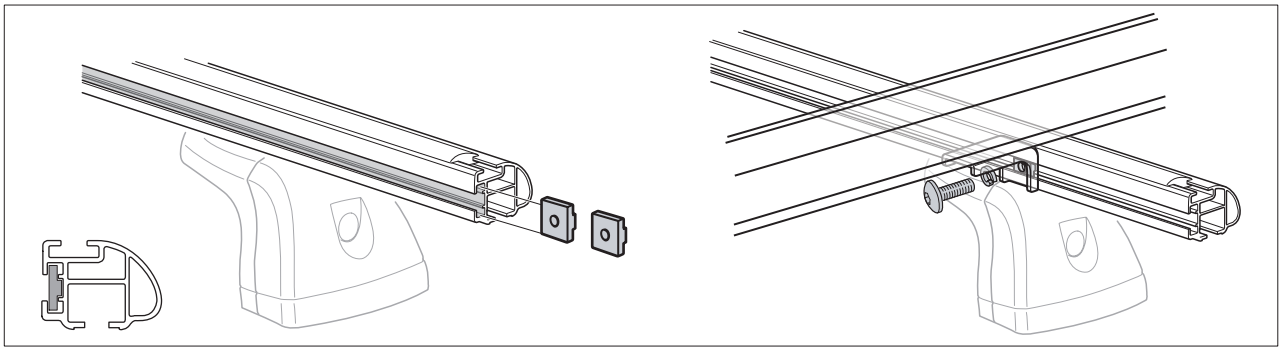

8

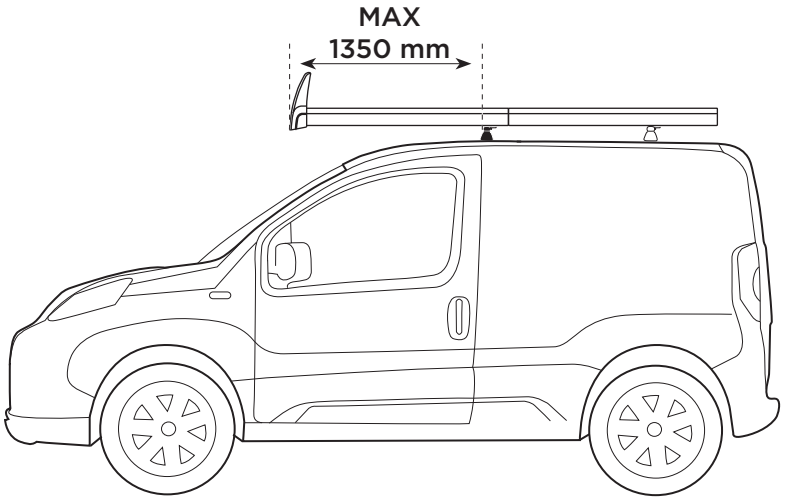
MAX
1350 mm

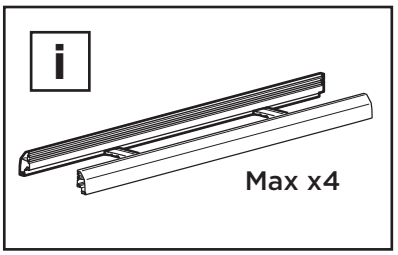
i
Max x4

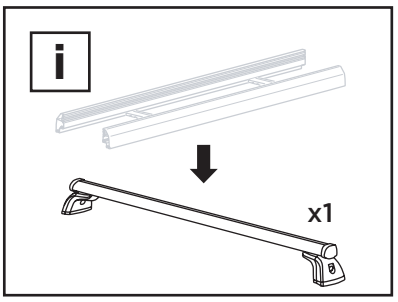
i
x1

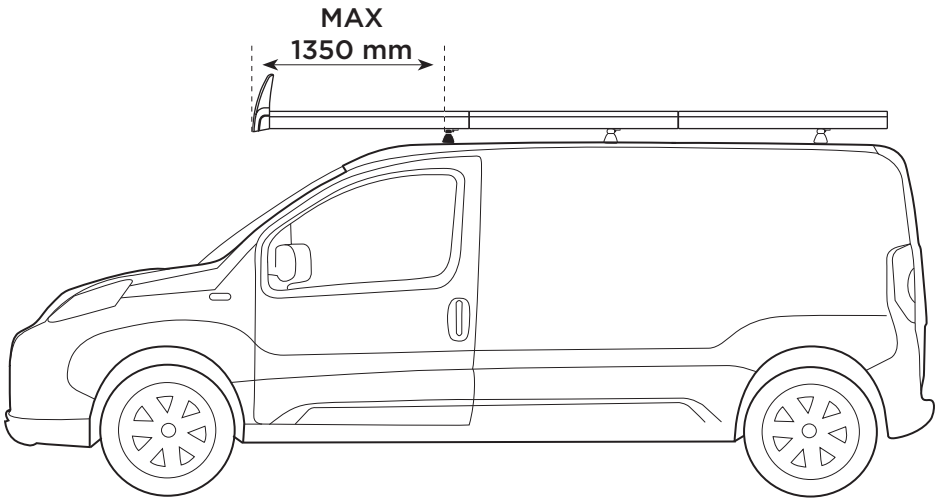
MAX
1350 mm

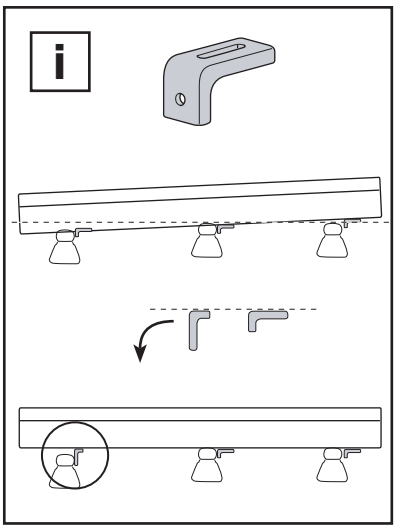
i

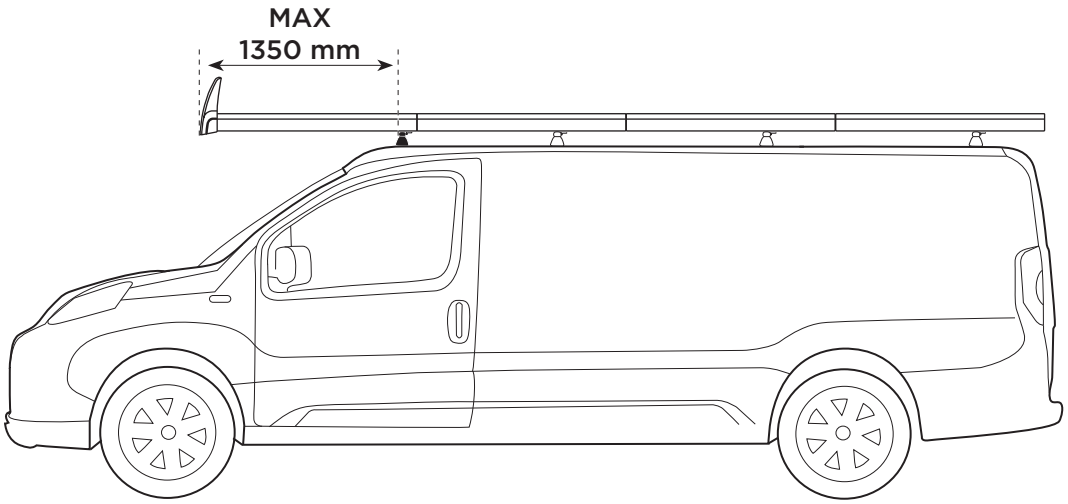
MAX
1350 mm

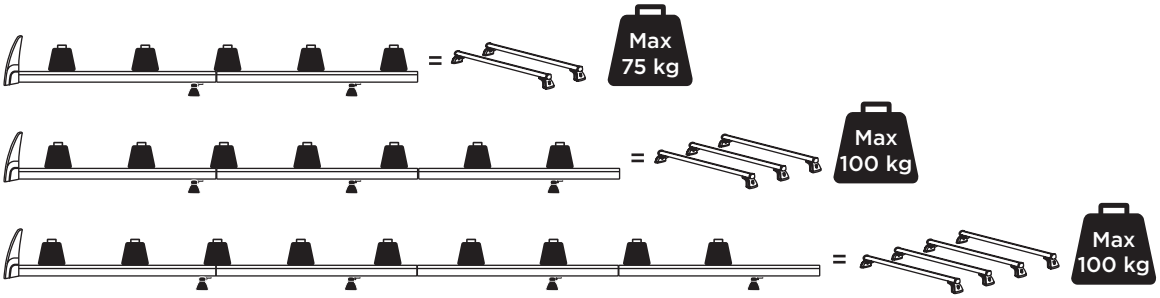
=
Max
75 kg
=
Max
100 kg
=
Max
100 kg

9

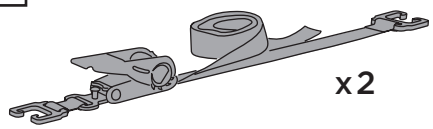

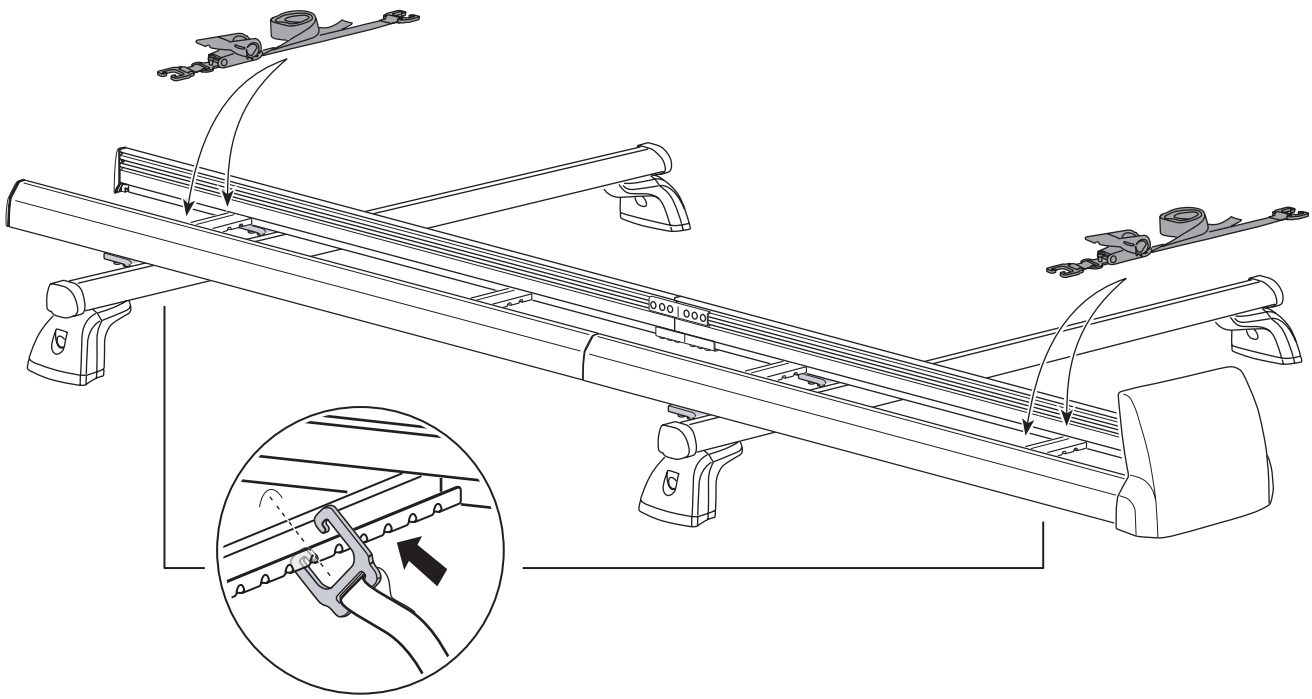

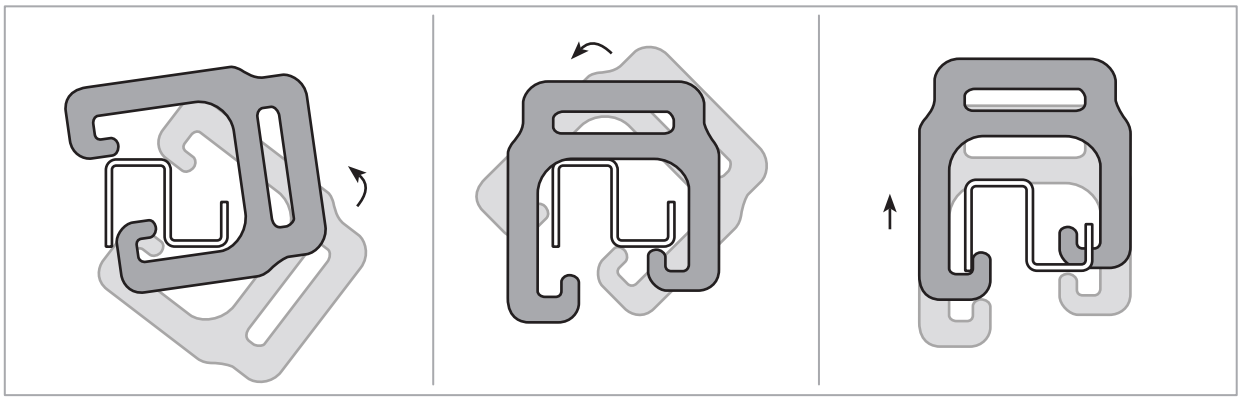

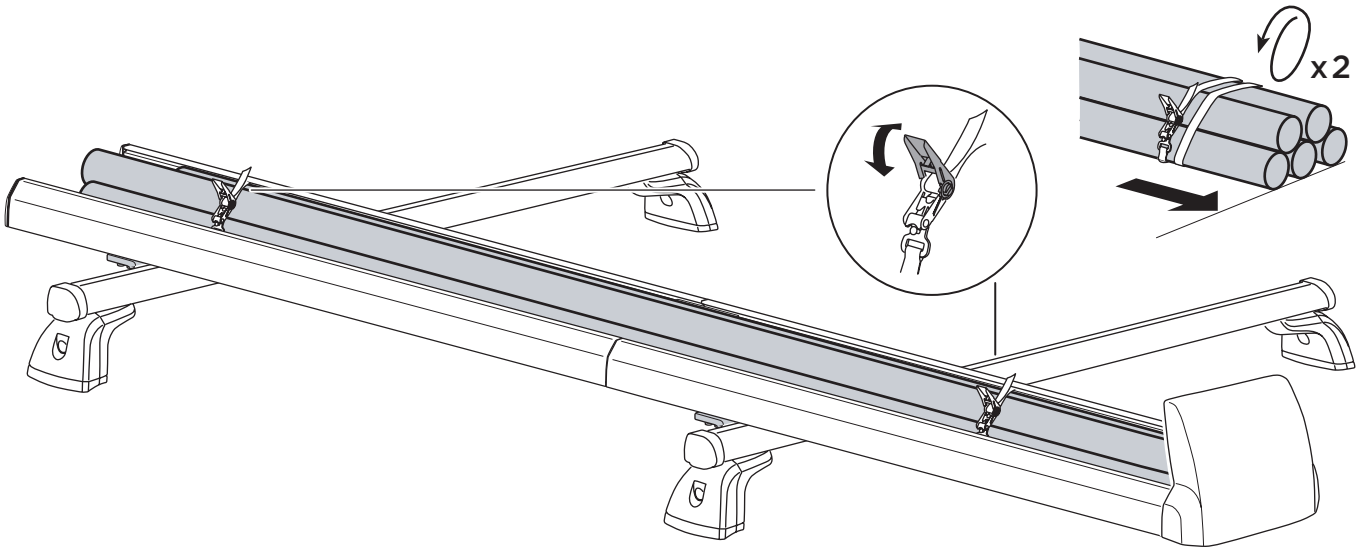

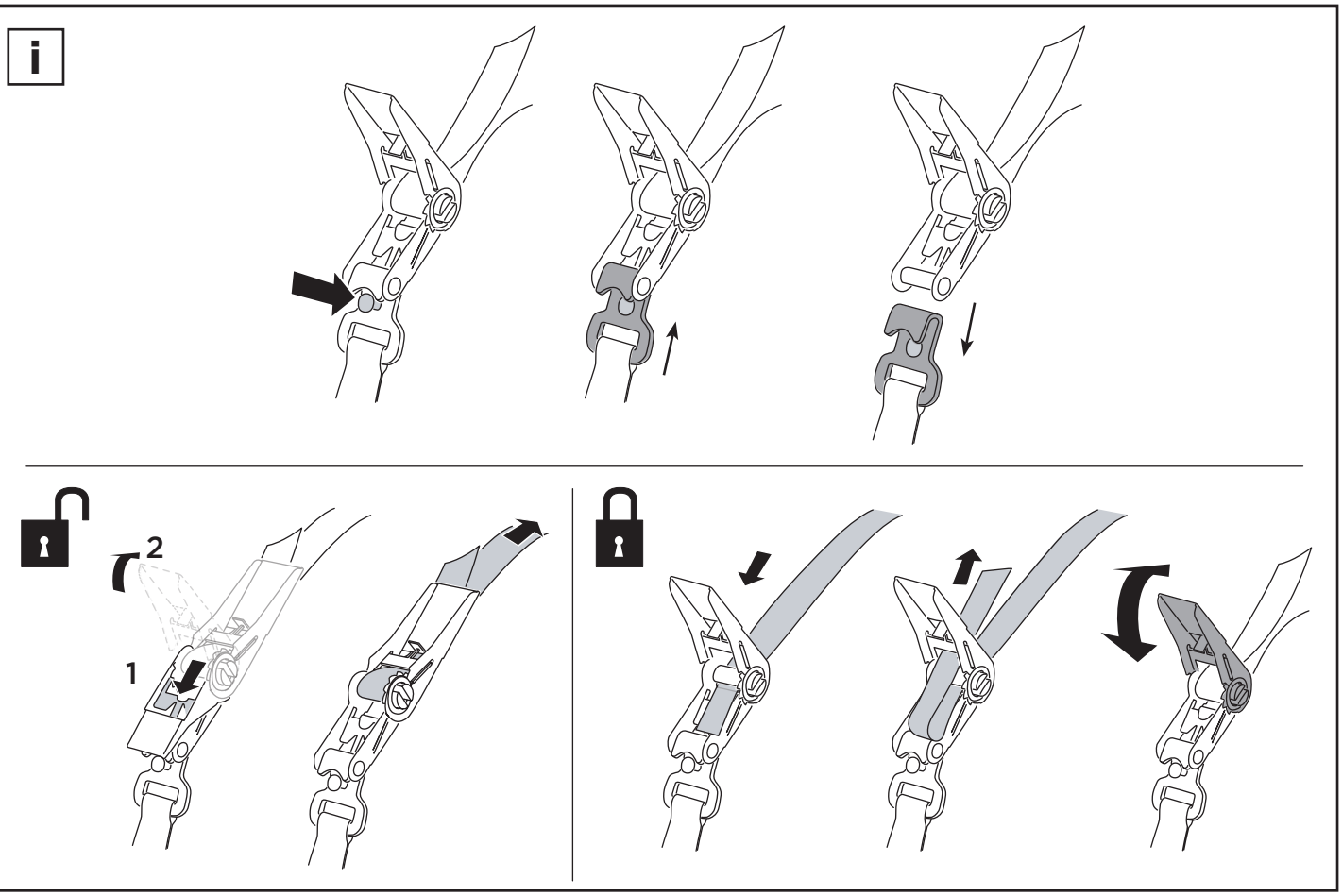

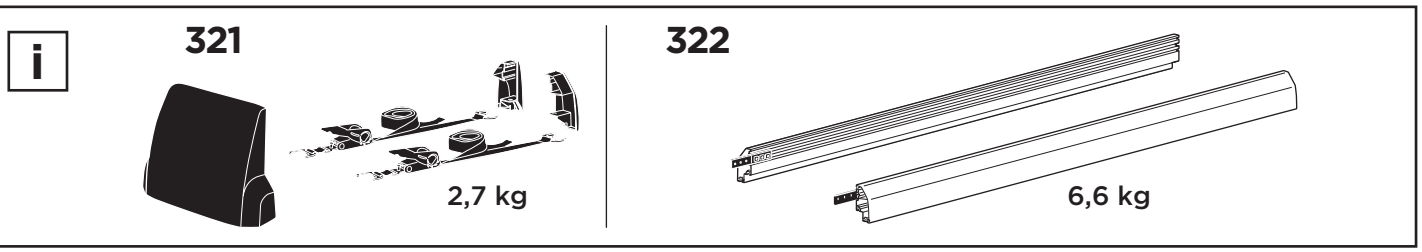

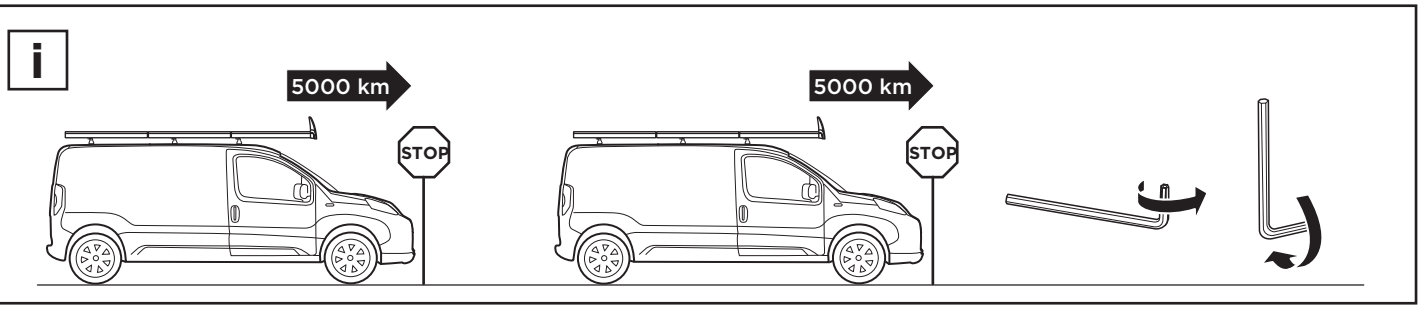

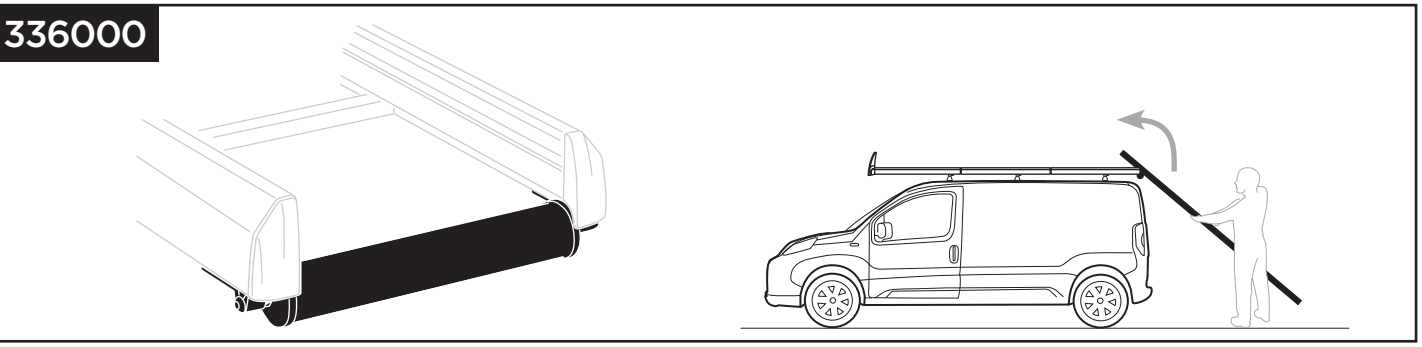

Thule Sweden AB, Box 69, 330 33 Hillerstorp, SWEDEN
» PART OF THULE GROUP
info@thule.com
www.thule.com
© Thule Group 2016. All rights reserved.