› Instructions

Thule K-Guard
840

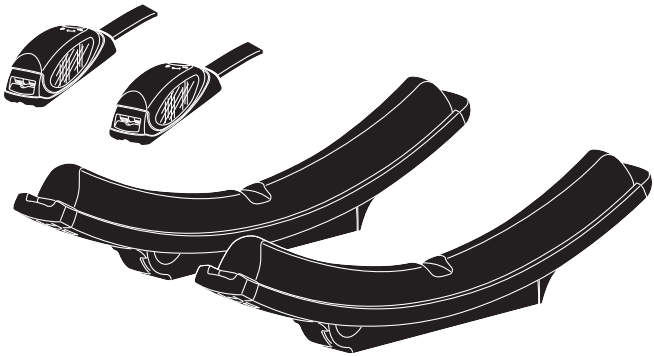

THULE.COM

C.20180921
501-7638-03

Bring your life
thule.com

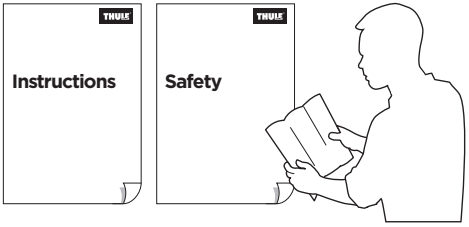

CITY CRASH
Complies with ISO norm

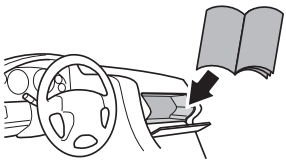

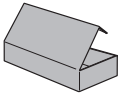

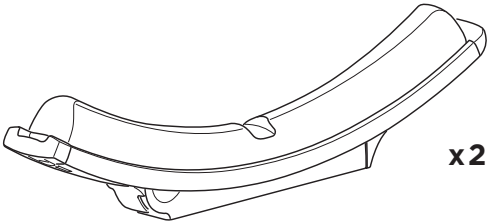

x2



x2



x4



x4



x4



x4

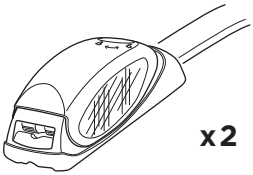

x2



x4

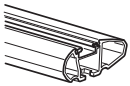

Thule WingBar Evo

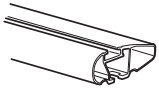

Thule WingBar

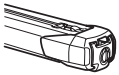

Thule SlideBar

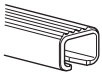

Thule Squarebar

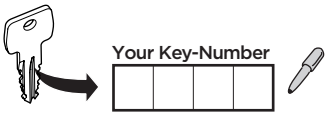



= **Max. 45 kg**

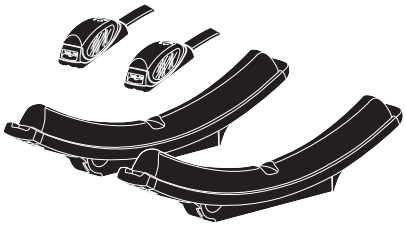

4 kg

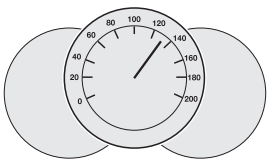

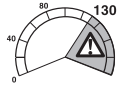

Max 130 km/h

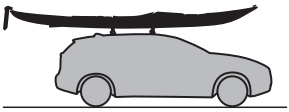

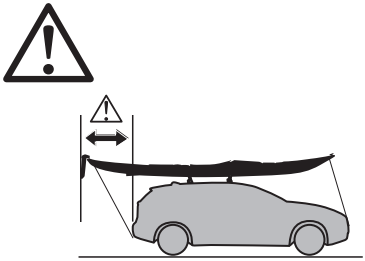

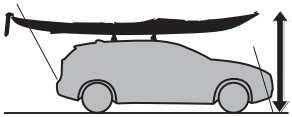



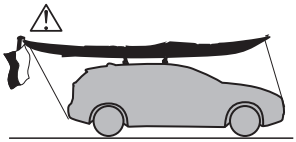

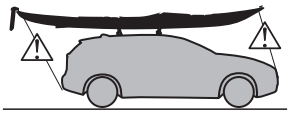

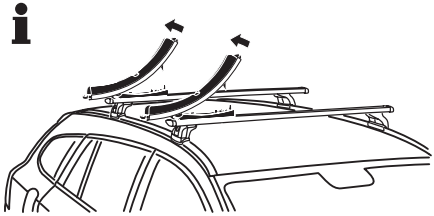

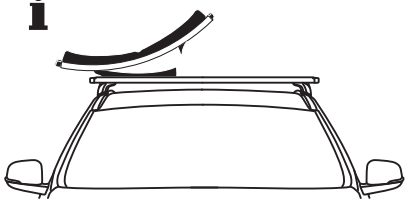


Thule WingBar Evo
Thule WingBar
Thule SlideBar

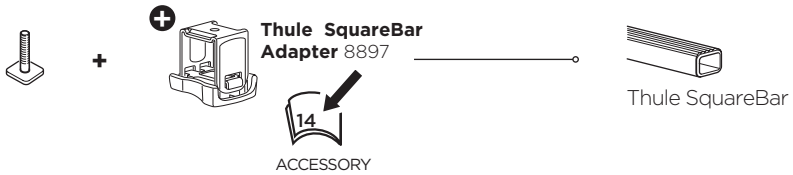
Thule SquareBar Adapter 8897
14
ACCESSORY
Thule SquareBar

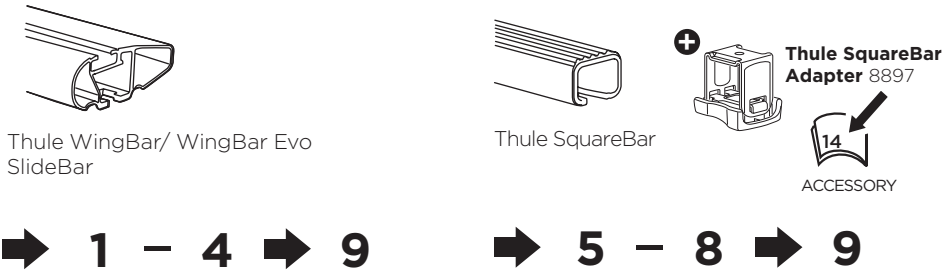
Thule WingBar/ WingBar Evo SlideBar
Thule SquareBar
Thule SquareBar Adapter 8897
14
ACCESSORY

➡ 1 – 4 ➡ 9

➡ 5 – 8 ➡ 9

1



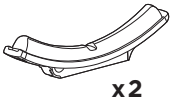

x2



x1



x2

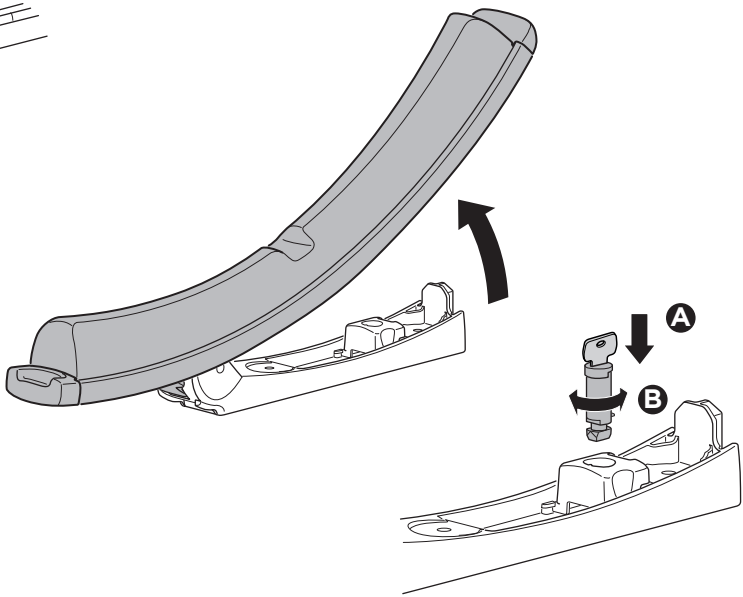

2



x4



x4



x4



x4

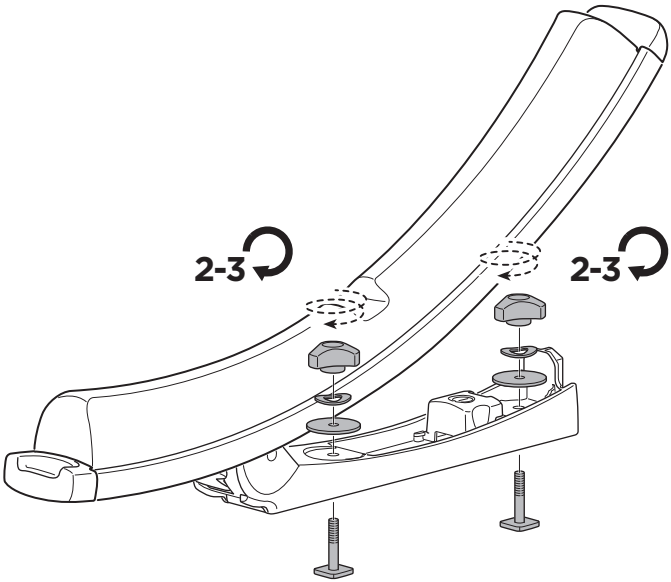

3

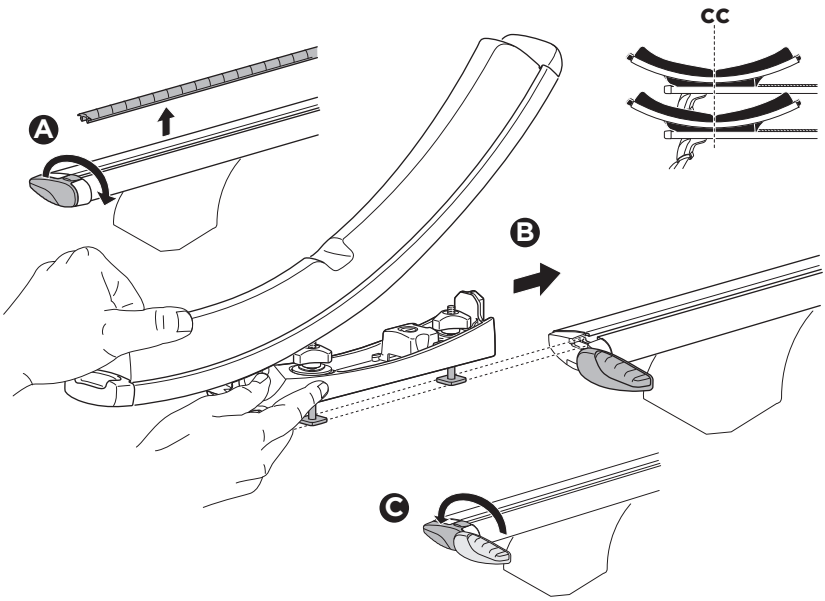

4

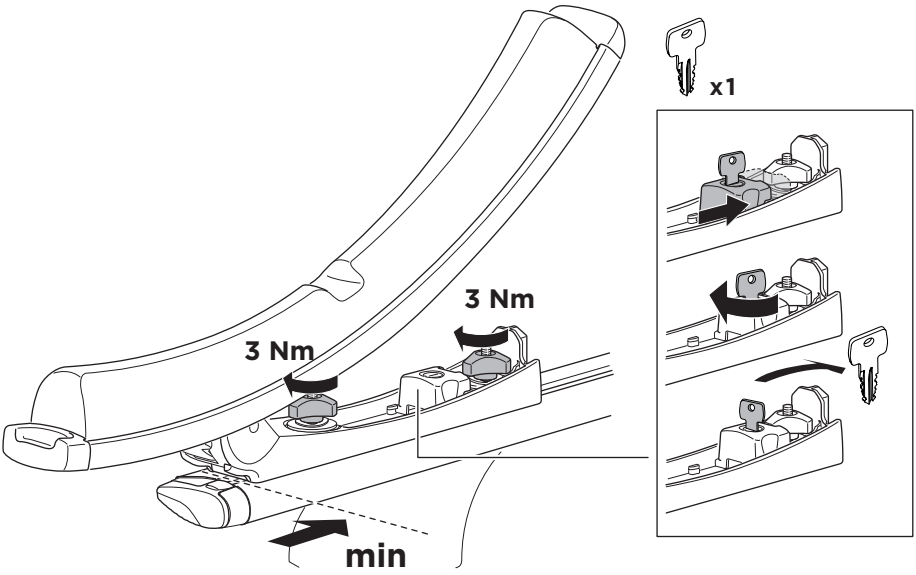

5 ⊕ Thule SquareBar Adapter 8897

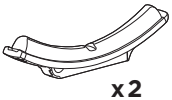

x2



x1



x2

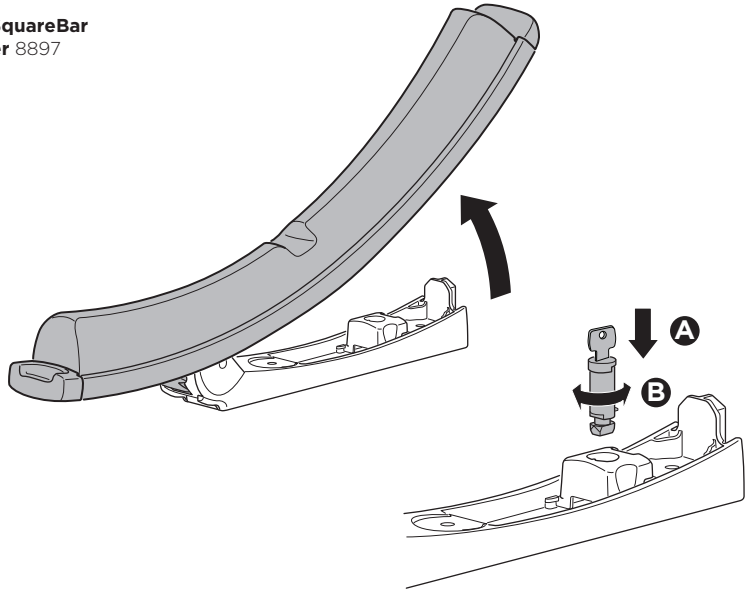

6 ⊕ Thule SquareBar Adapter 8897



x4



x4



x4

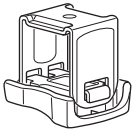

x4



x4



x4

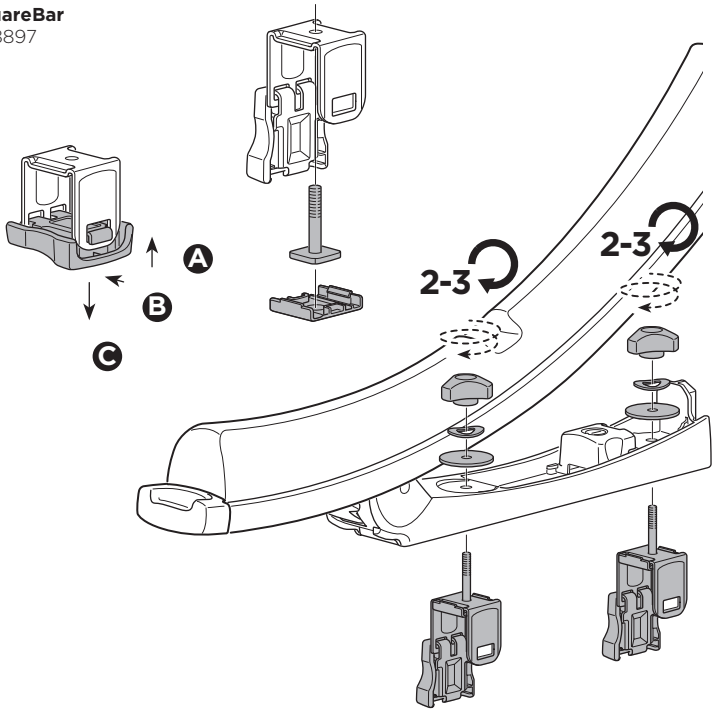

7 ⊕ Thule SquareBar Adapter 8897

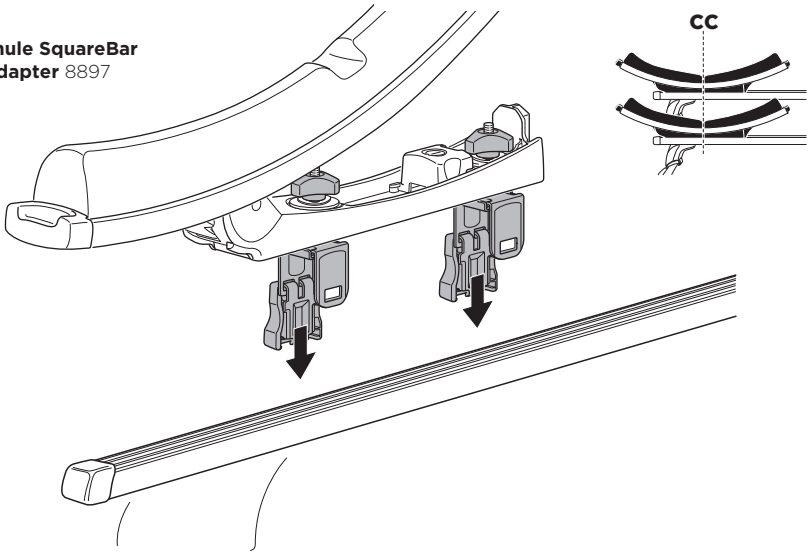

8 ⊕ Thule SquareBar Adapter 8897

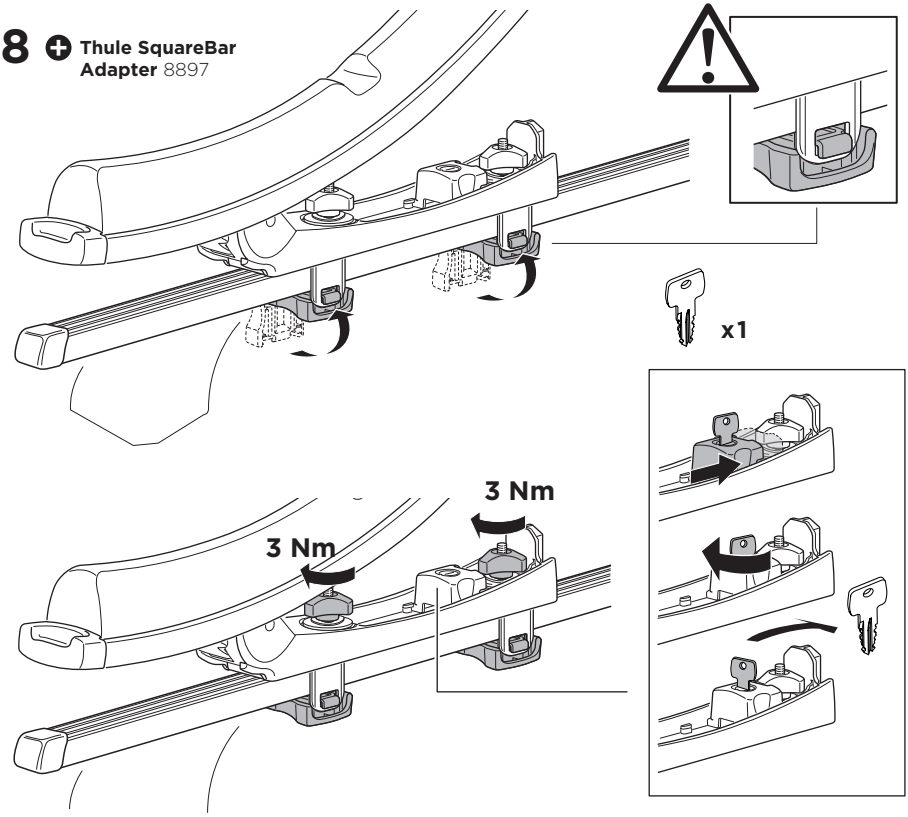

9

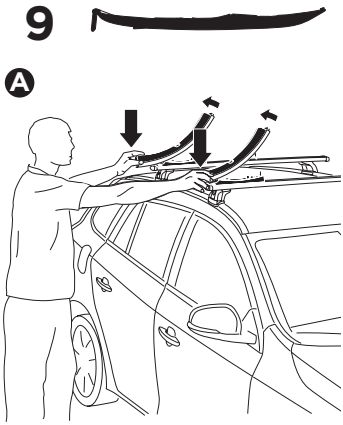

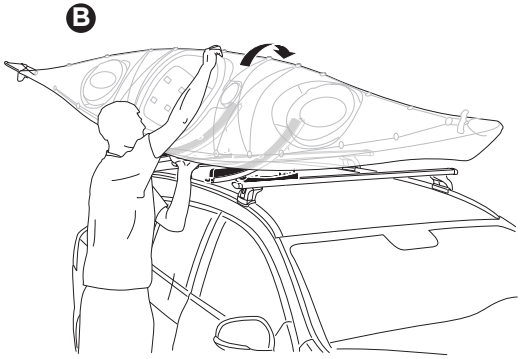

10

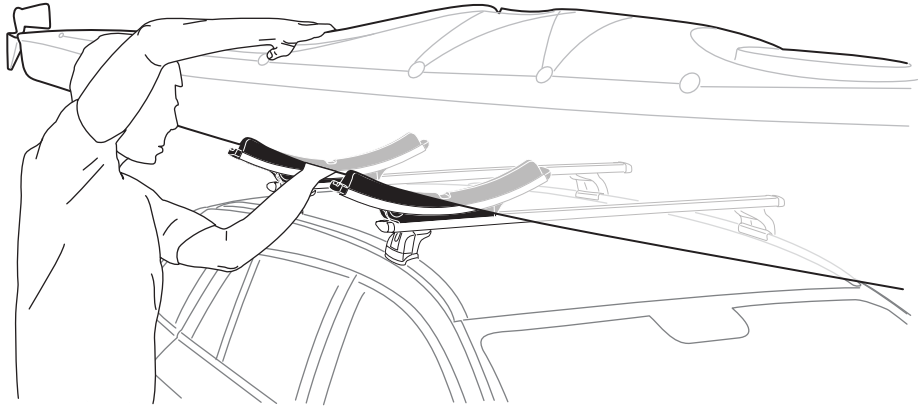

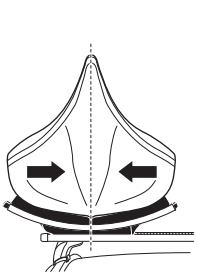

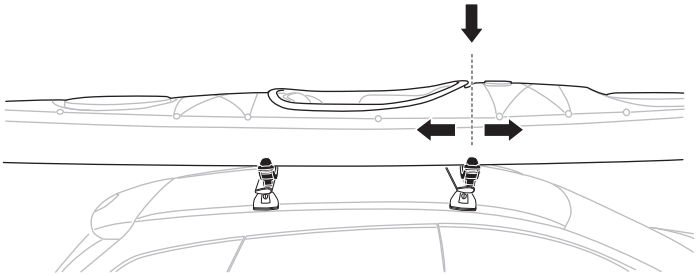

11





x1



x2

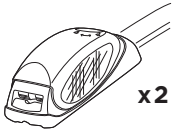

x2

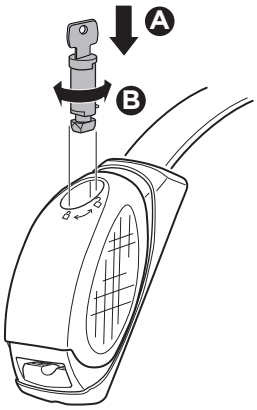

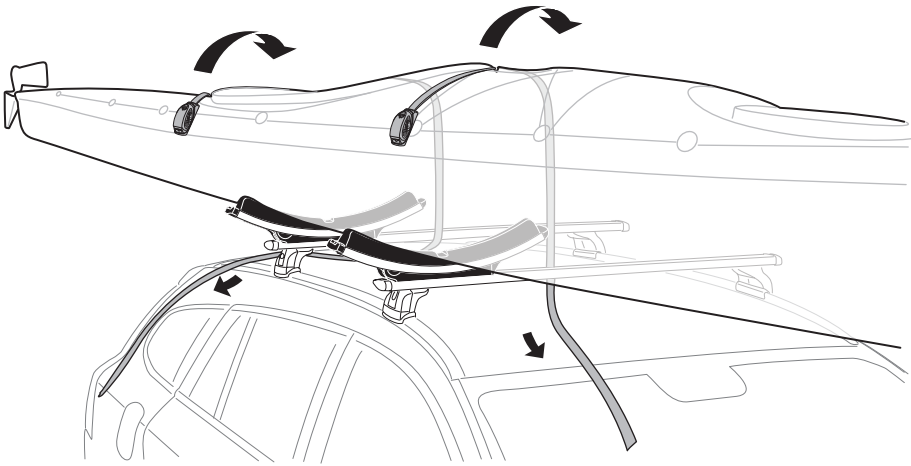

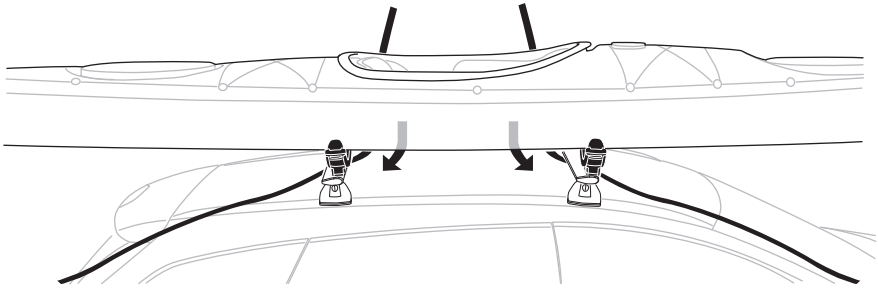

12

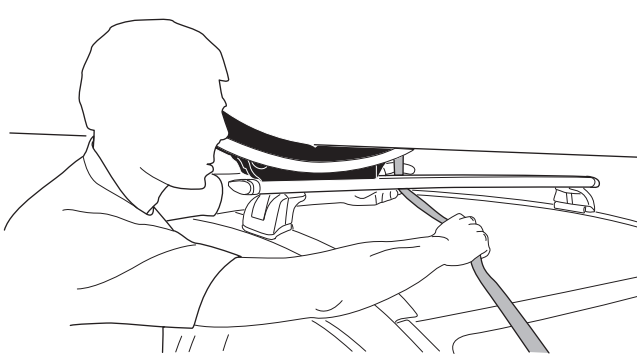

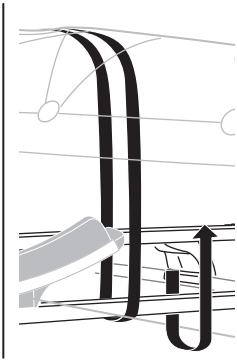

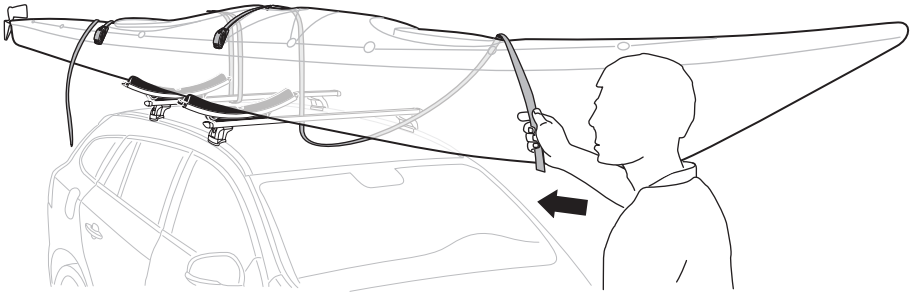

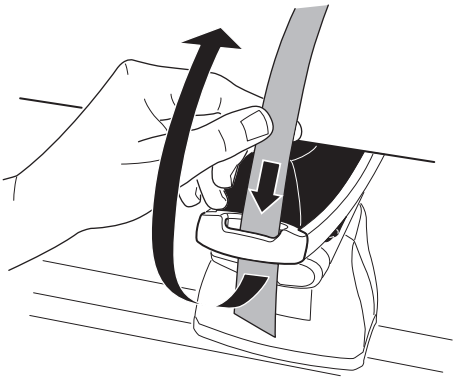

SlideBar

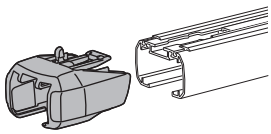

320

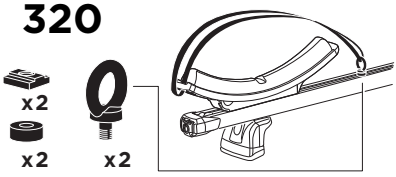

13

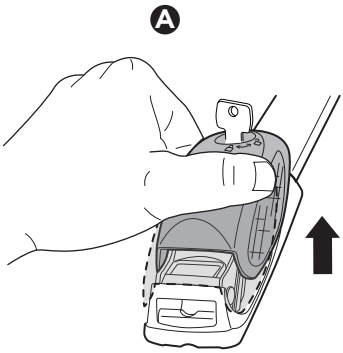

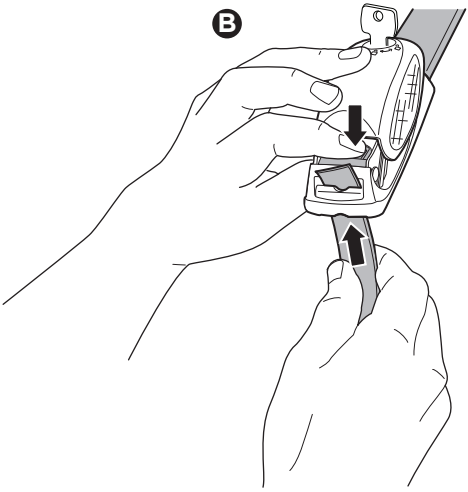

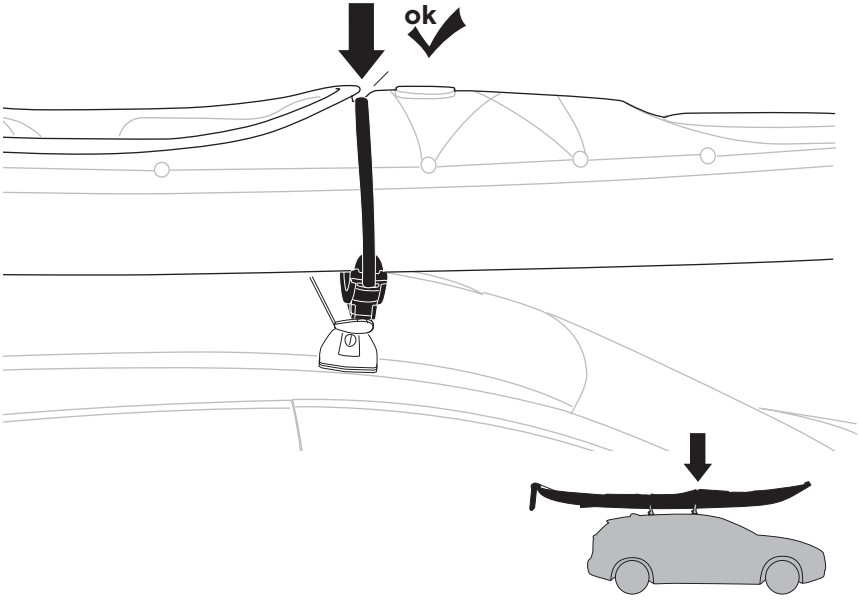

14

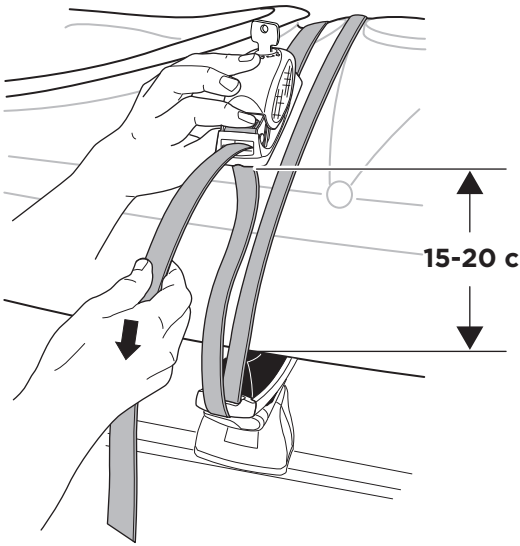

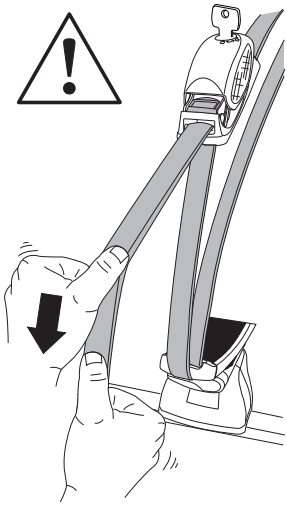

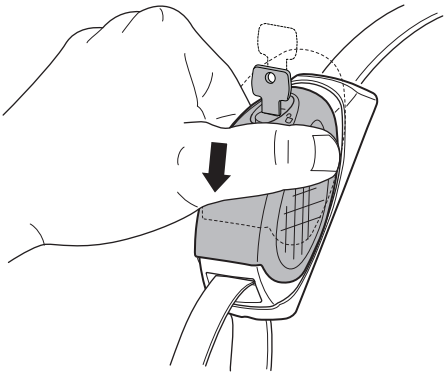

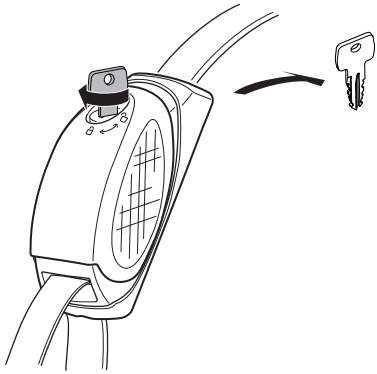

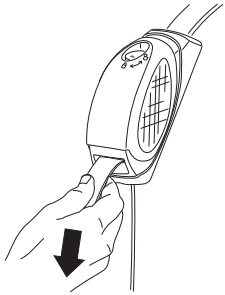

EN Accessories
DE Zubehör
FR Accessoires
NL Accessoires
IT Accessori
ES Accesorios
PT Acessórios
SV Tillbehör
DK Tilbehør
NE Tilbehør
FI Lisävarusteet
ET Lisavarustus
LV Piederumi
LT Priedai
PL Akcesoria
RU Аксессуары
UK Аксесуари
BG Принадлежности
CS Doplòky
SK Príslušenstvo
SL Dodatki
HR/BiH Dodaci
RO Accesorii
HU Tartozékok
EL Εξαρτήματα
TR Aksesuarlar
AR الملحقا
HE אביזרים
ZH 附件
JA アクセサリー
KO 액세서리
TH อุปกรณ์เสริม

Thule SquareBar Adapter
8897



Thule QuickDraw
838

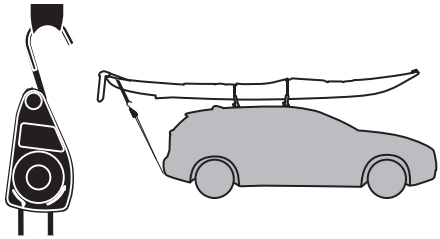

Thule One-Key System

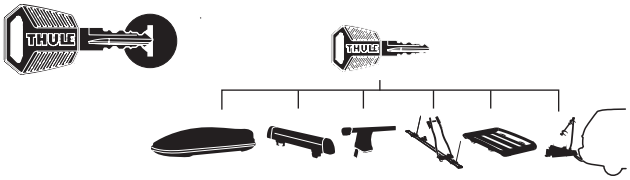

450400 (x4)
450600 (x6)
450800 (x8)
451200 (x12)
451600 (x16)

Thule Sweden AB, Borggatan 5, 335 73 Hillerstorp, SWEDEN
info@thule.com
www.thule.com
» PART OF THULE GROUP
© Thule Group 2018. All rights reserved.
501-7638-03