› Instructions

Thule Caprock rail mount 181002



THULE GUARANTEE
THULE.COM

5564360001

Bring your life
thule.com

ISUZU D-Max Crew Cab (Mk. III), 4-dr Pickup. 20-
MAZDA BT-50 Dual Cab (Mk. III), 4-dr Pickup. 20-

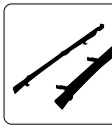
6.7 kg
14.8 lbs

Instructions
Thule Caprock rail mount



Instructions
Thule Caprock



Safety

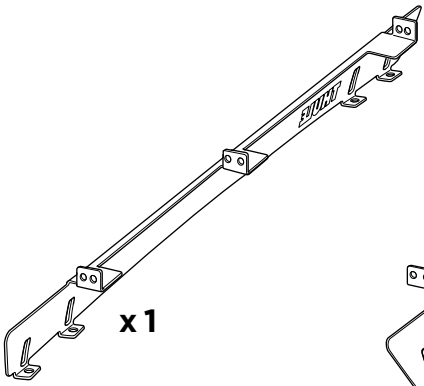
x 1

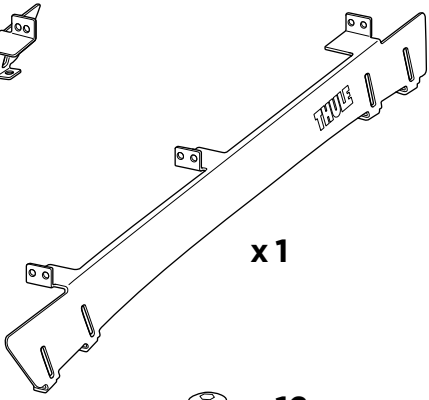
x 1


x 1


x 12


x 8


x 12


x 8

6 mm
¼"

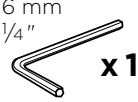
x 1

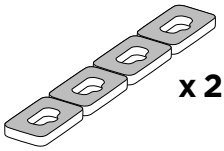
x 2




=
Max
100 Kg /220 lbs

1

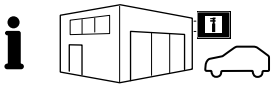

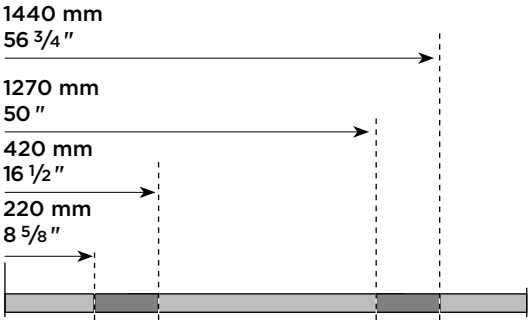
1440 mm
56 3/4 ″
1270 mm
50 ″
420 mm
16 1/2 ″
220 mm
8 5/8 ″

A

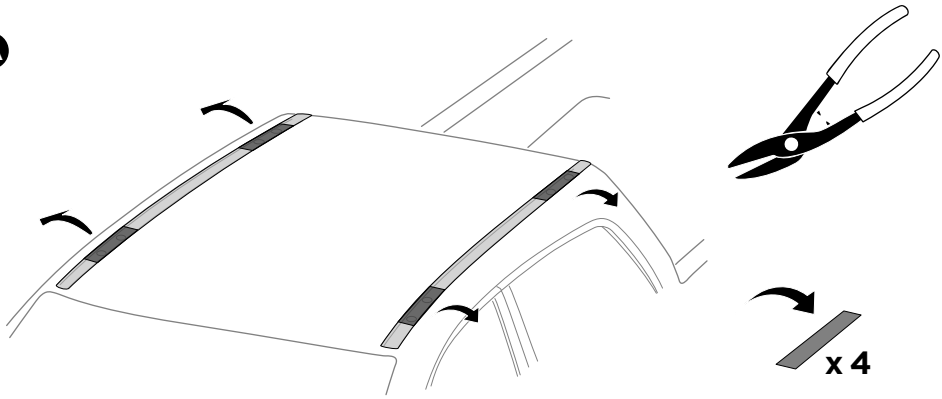
x 4

B

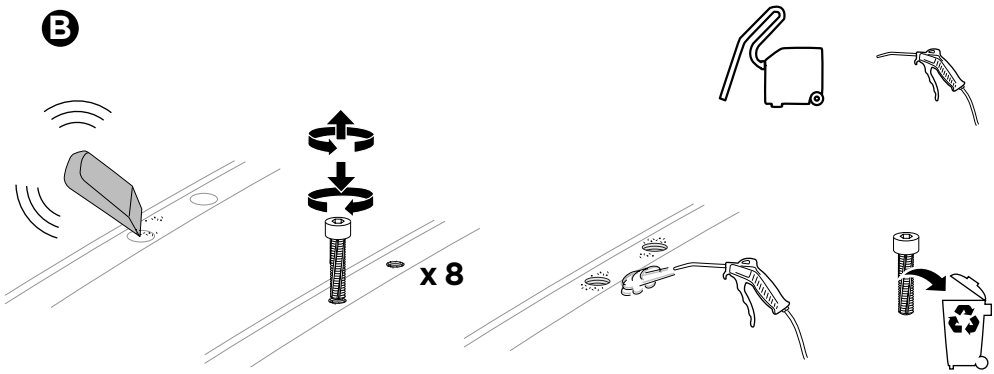
x 8

C

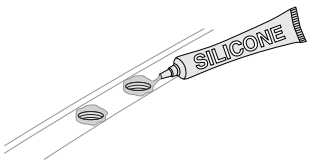
SILICONE


SILICONE

2

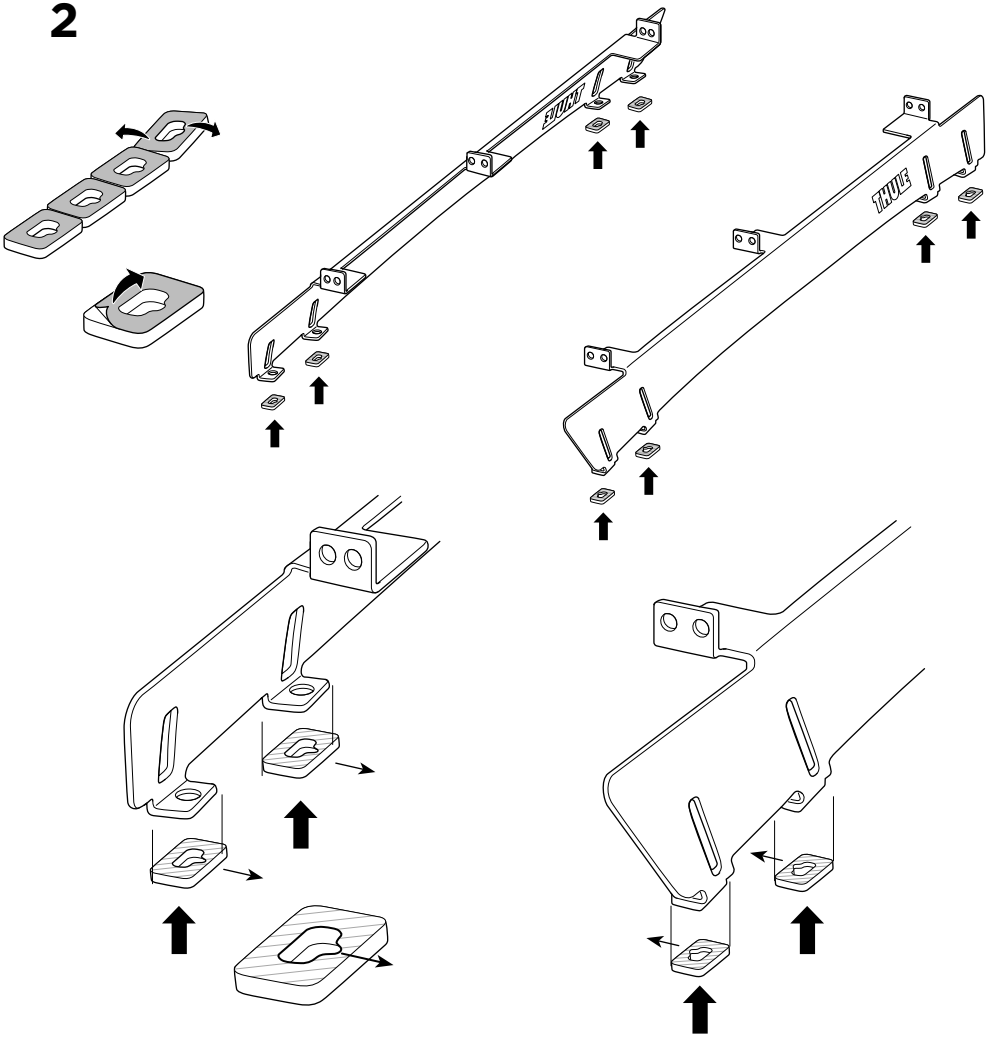

3

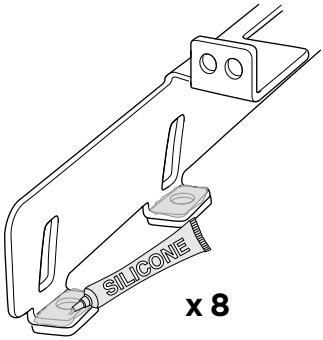



4

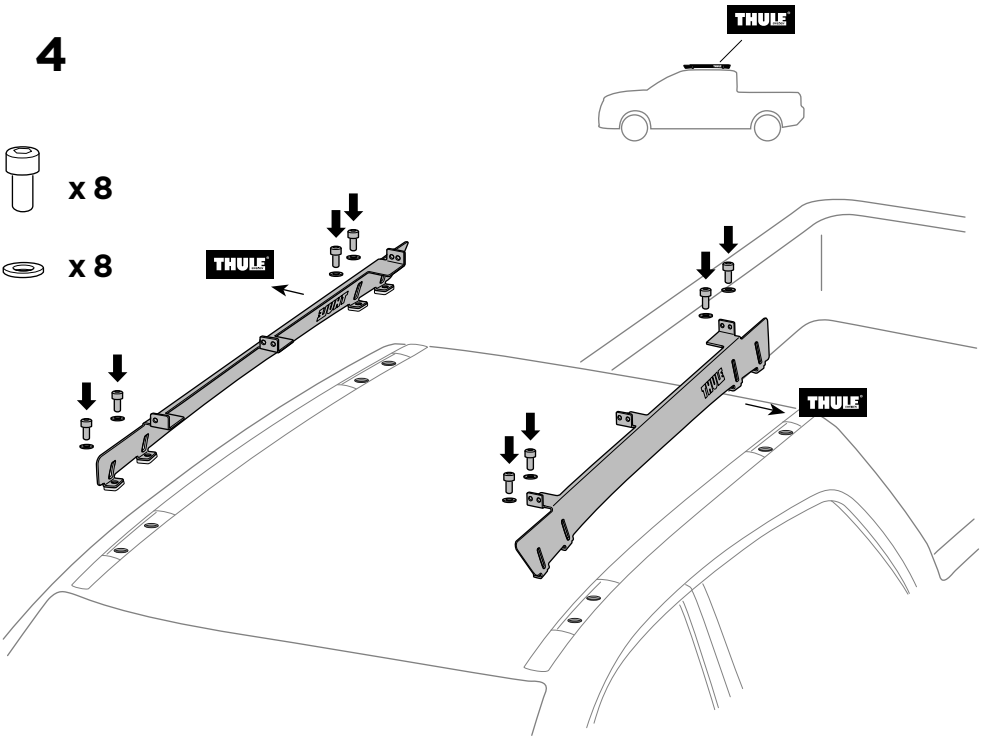

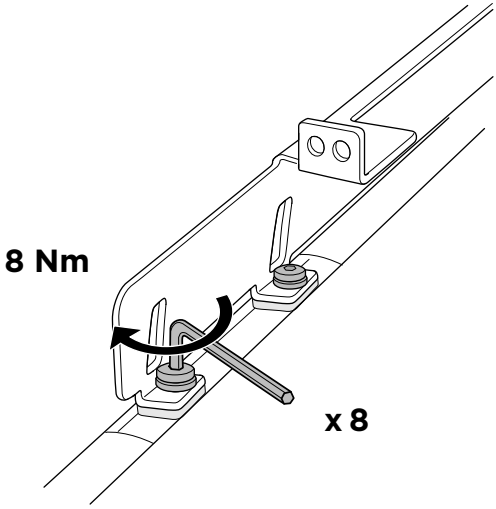

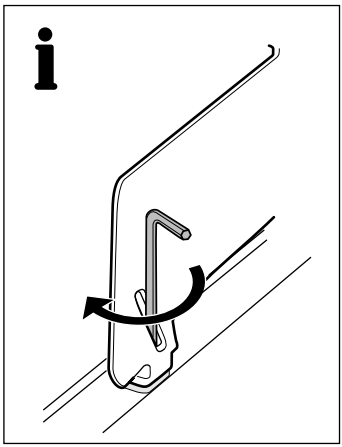

5

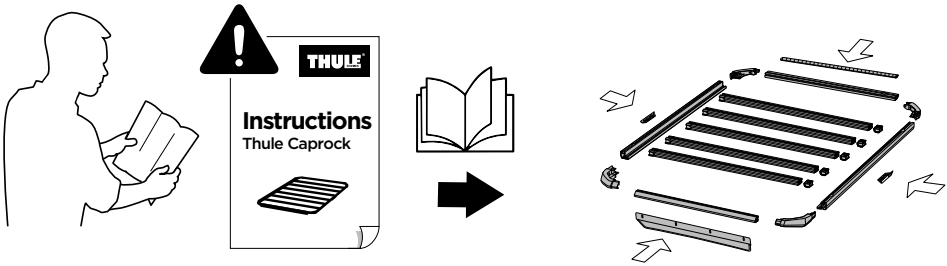

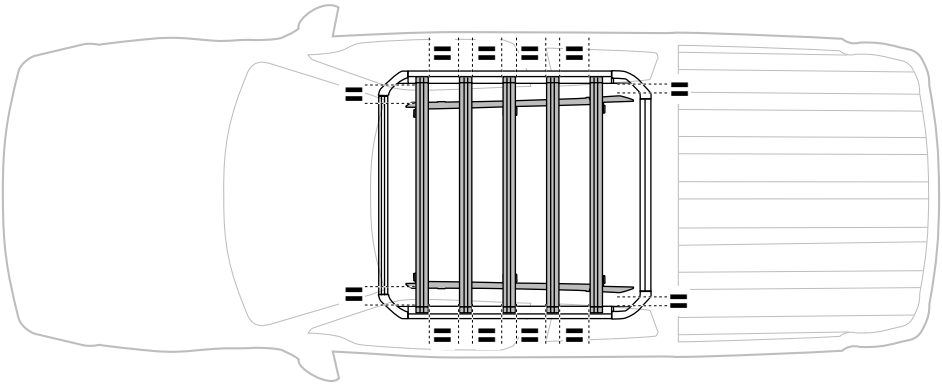

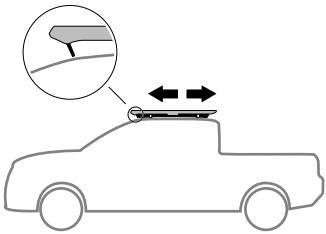

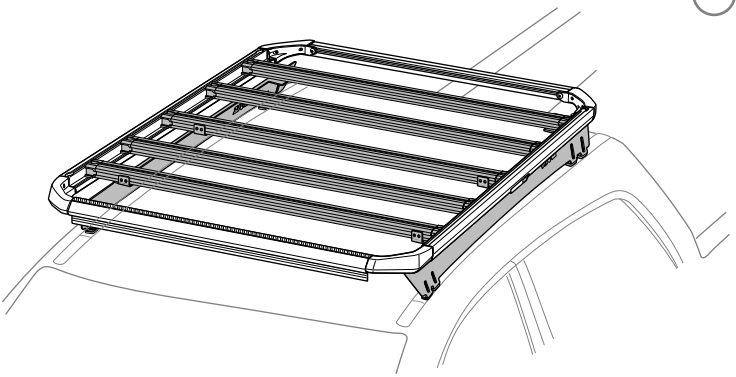

6

x 12

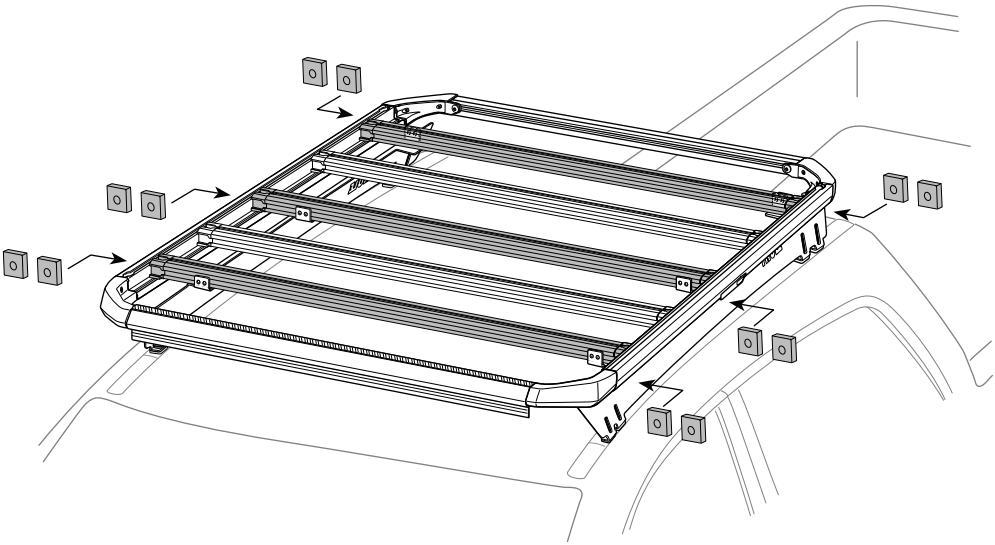

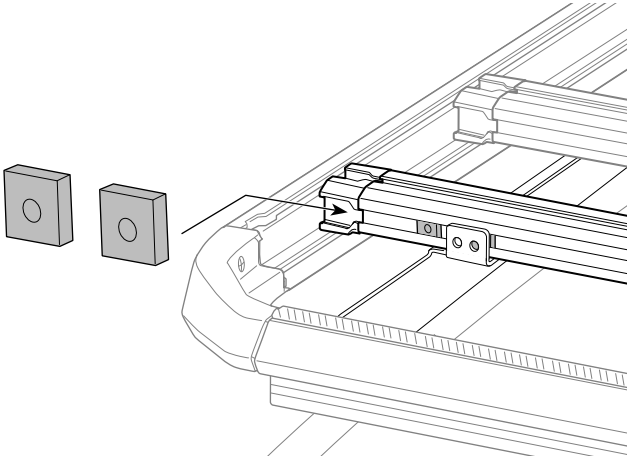

7

x 12

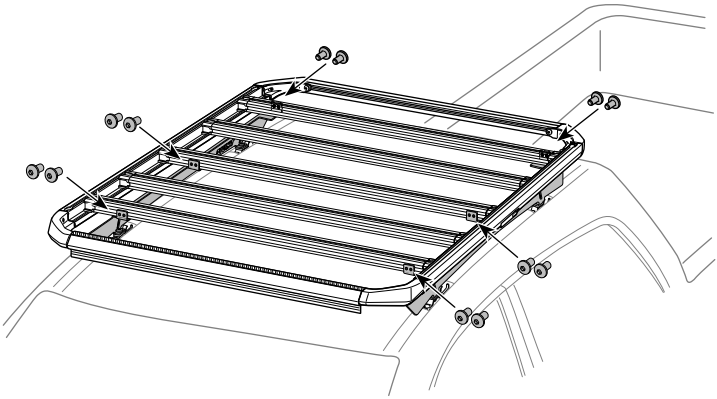

15 Nm

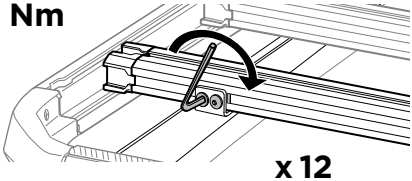

x 12

8





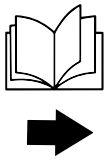

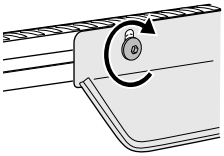

15 Nm

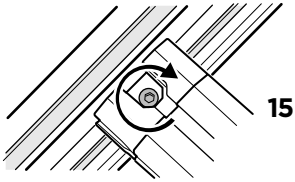

15 Nm

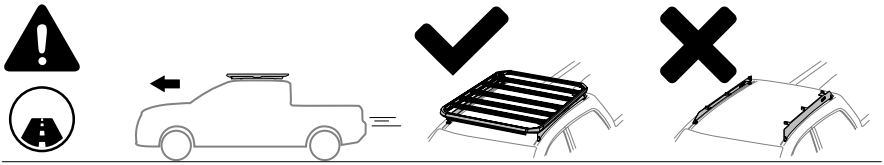

Thule Sweden AB. Borggatan 5, 335 73 Hillerstorp, SWEDEN
info@thule.com | *www.thule.com*

Thule Inc. 42 Silvermine Road, Seymour, CT 06483
Thule Canada Inc. 710 Bernard, Granby QC J2J 0H6
North American Consumer Service:
Toll Free 800-238-2388, Fax 450-777-3615
www.thule.com

Register online at:
www.thule.com/register

© Thule Group. All rights reserved.
5564360001 | 2024-12-20 #00

» PART OF THULE GROUP