Thule DockGrip 895000

› Instructions

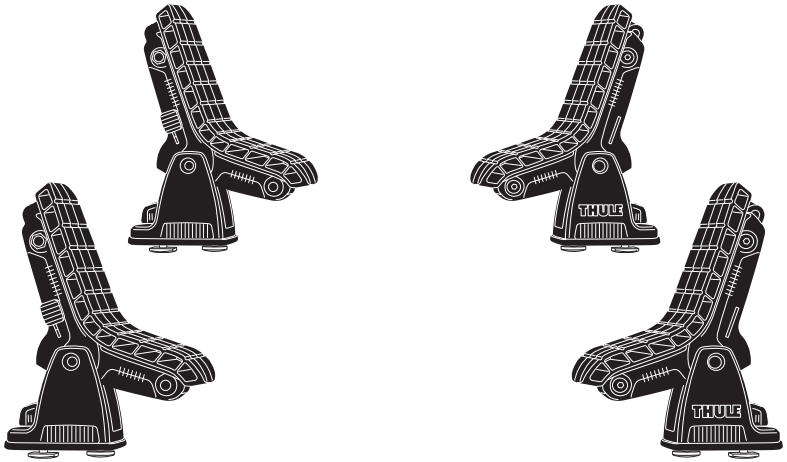

THULE
BRING IT!
GUARANTEE
THULE.COM

CITY CRASH
Complies with ISO norm

TÜVRheinland CERTIFIED
www.tuv.com
ID 1000000000

geprüfte Sicherheit

Thule WingBar Thule AeroBar Thule ProBar Thule SlideBar

895000

C.20161011
506-7226-01

Bring your life
thule.com

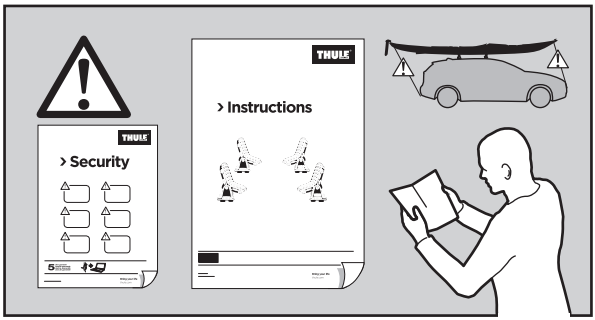
THULE
› Security
THULE
› Instructions

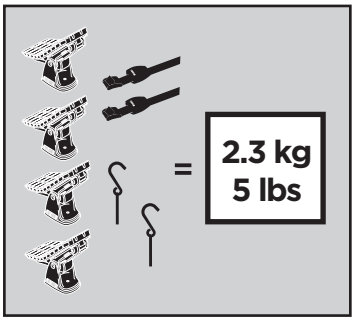
=
2.3 kg
5 lbs

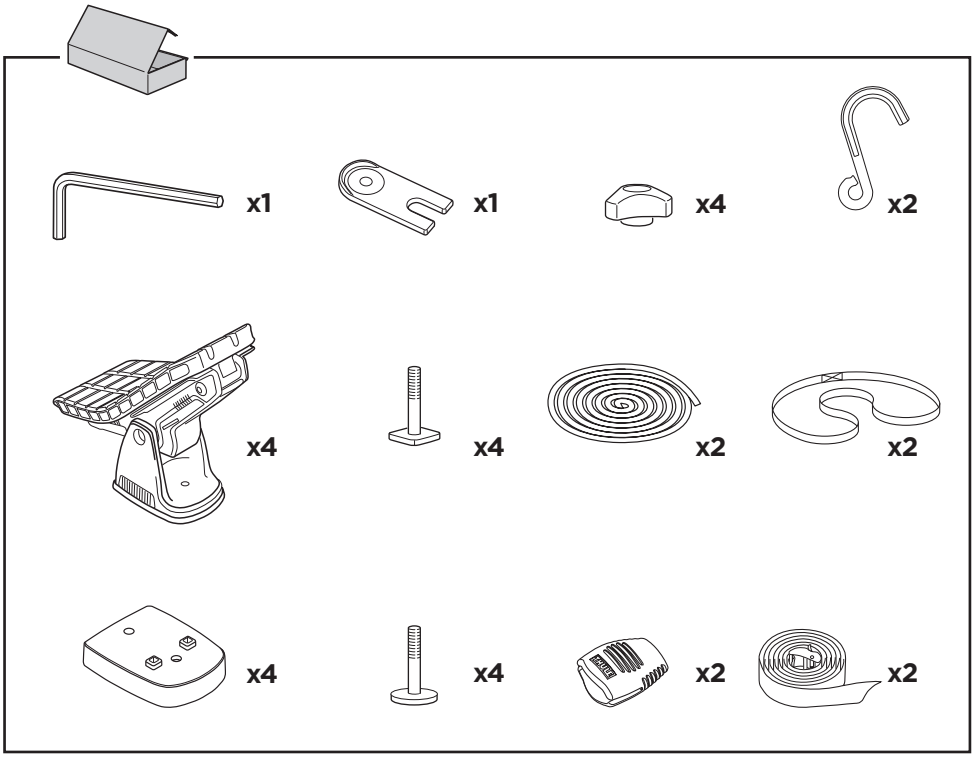
x1
x1
x4
x2
x4
x4
x2
x2
x4
x4
x2
x2

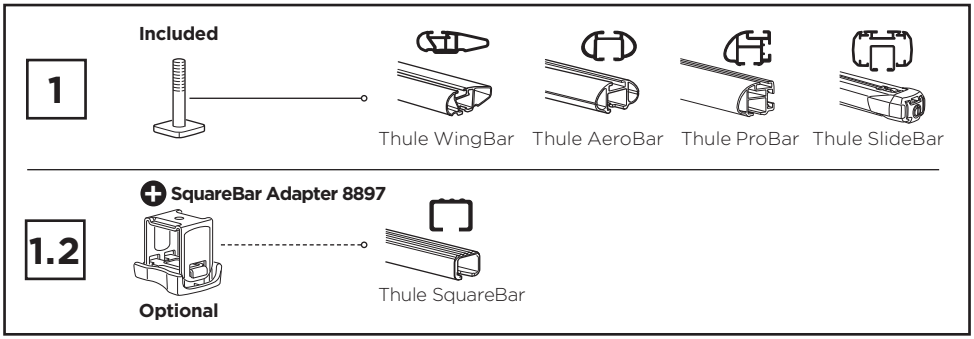
1
Included
Thule WingBar
Thule AeroBar
Thule ProBar
Thule SlideBar
1.2
SquareBar Adapter 8897
Optional
Thule SquareBar

1

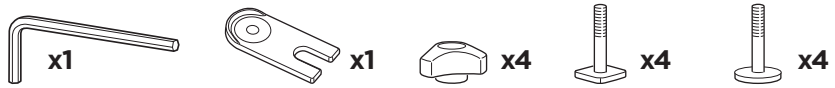

A

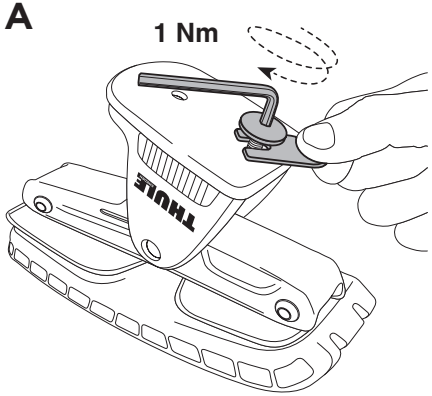

B

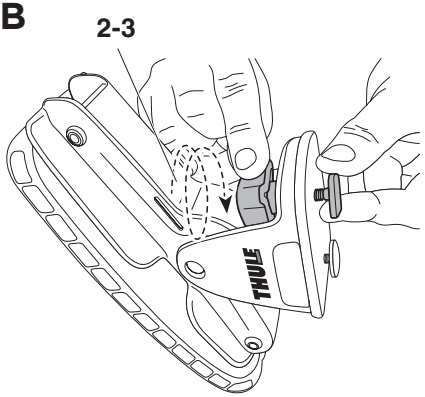

C

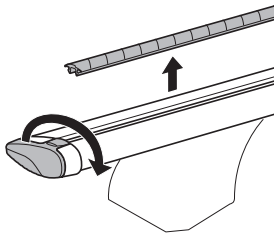

D

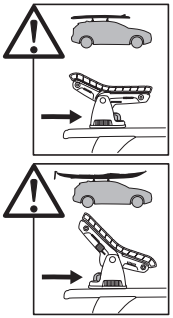

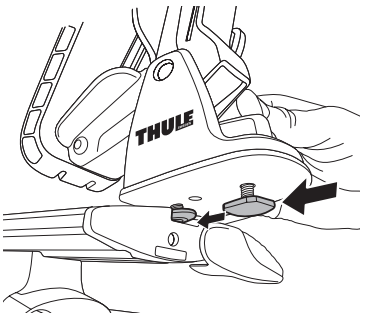

E

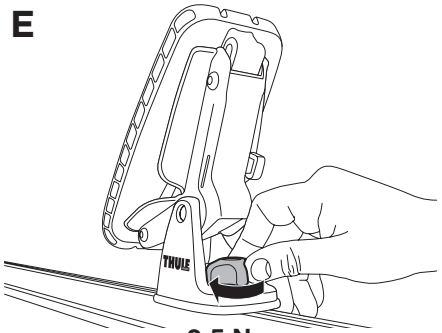

F

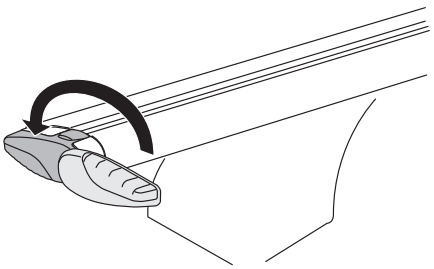

1.2


x1


x8


x4


x4

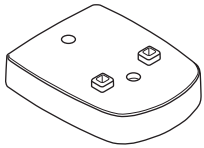
x4

Optional

SquareBar Adapter 8897

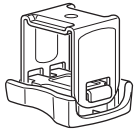
x4

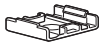
x4

A

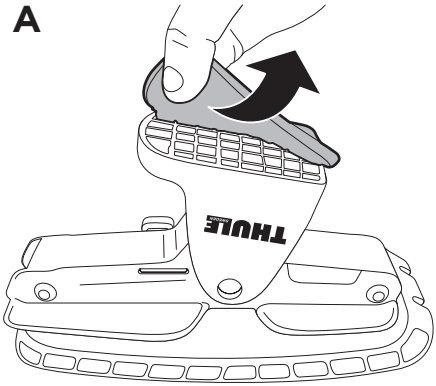

B

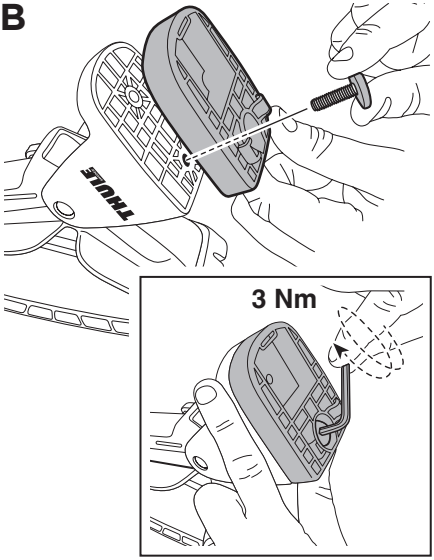

C

SquareBar Adapter 8897

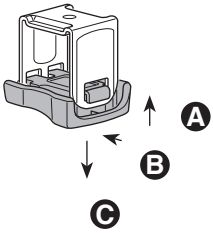

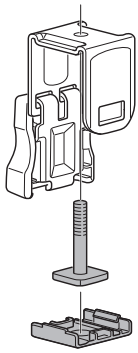

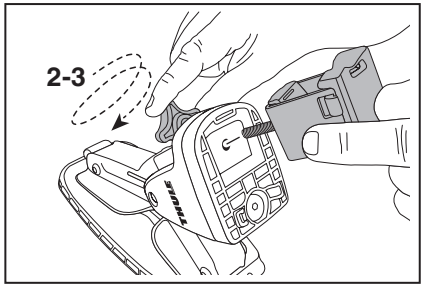

1.2

D

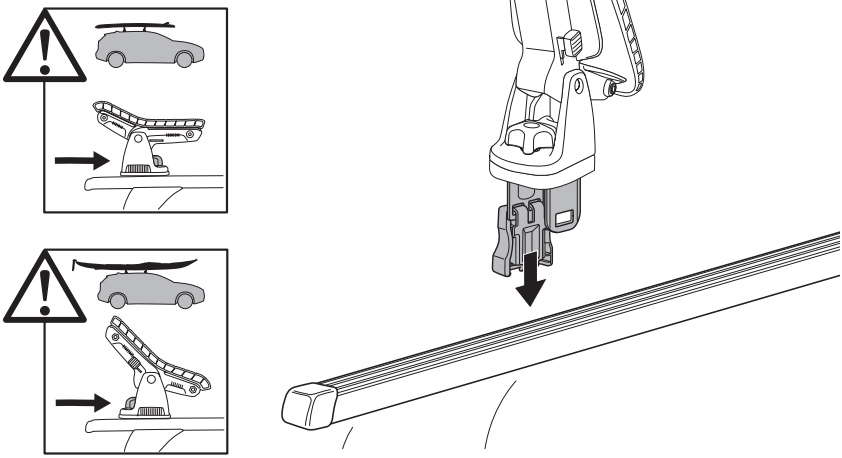

E

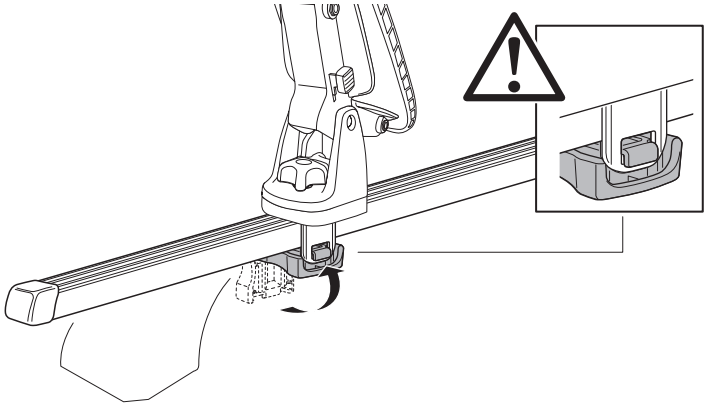

F

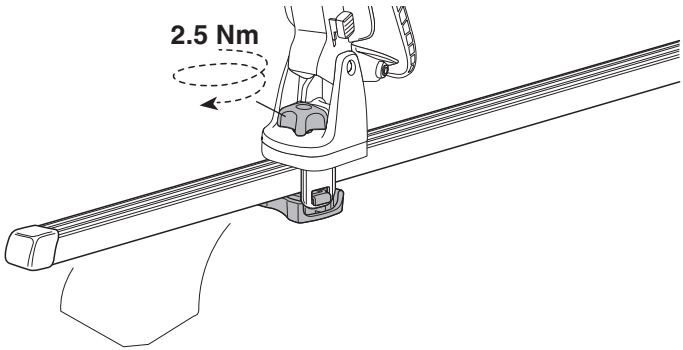

2

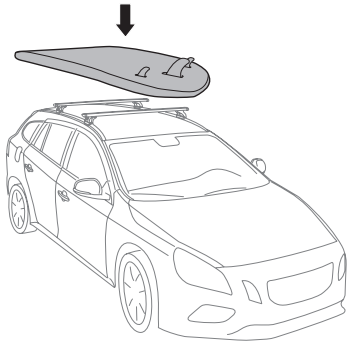

Min 610mm / 24 inch

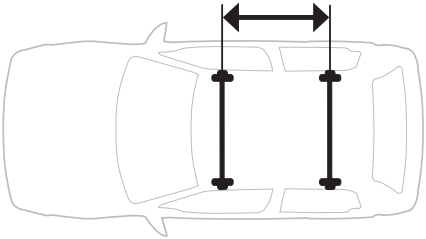

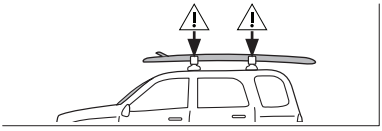

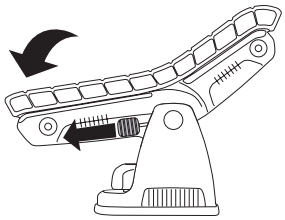

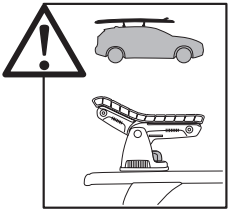

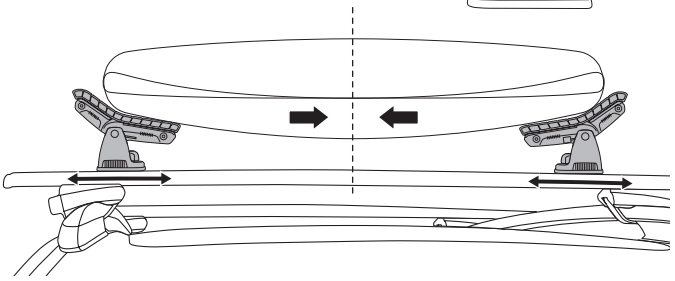

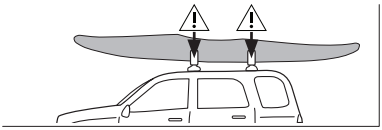

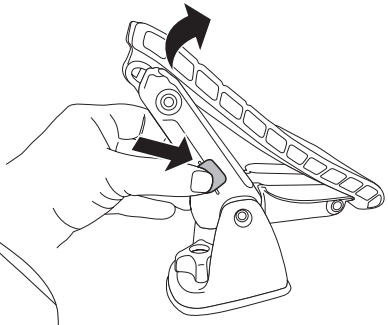

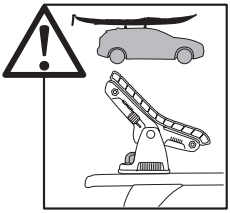

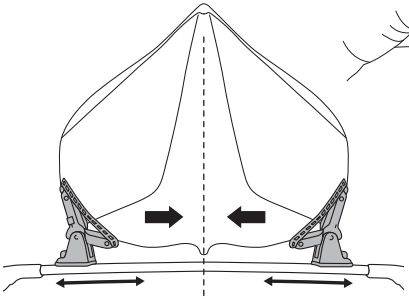

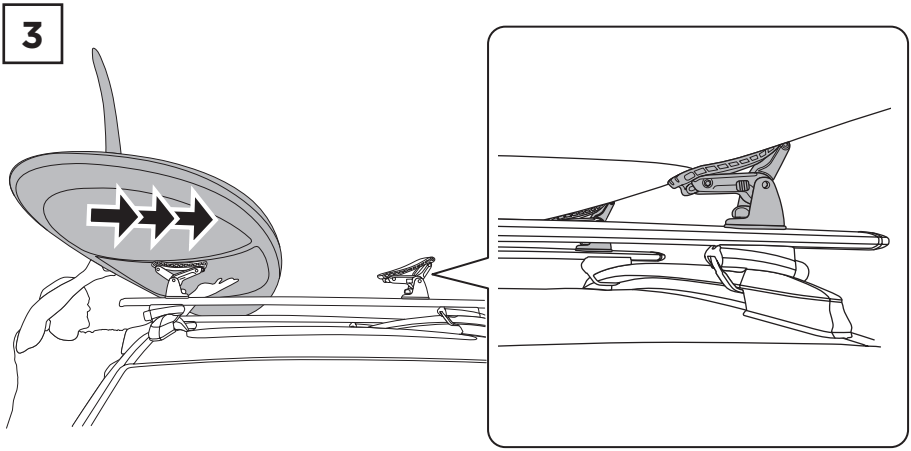
3

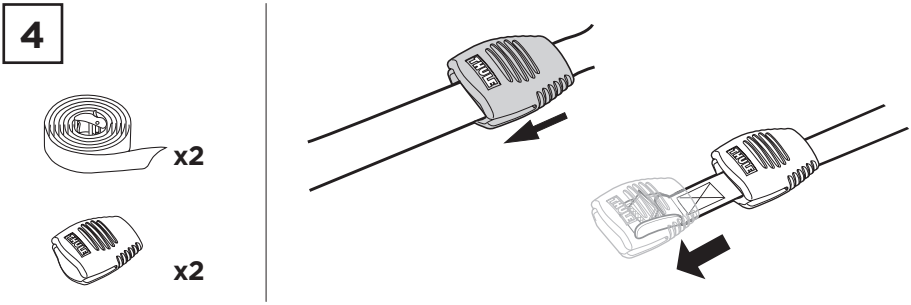
4
x2
x2

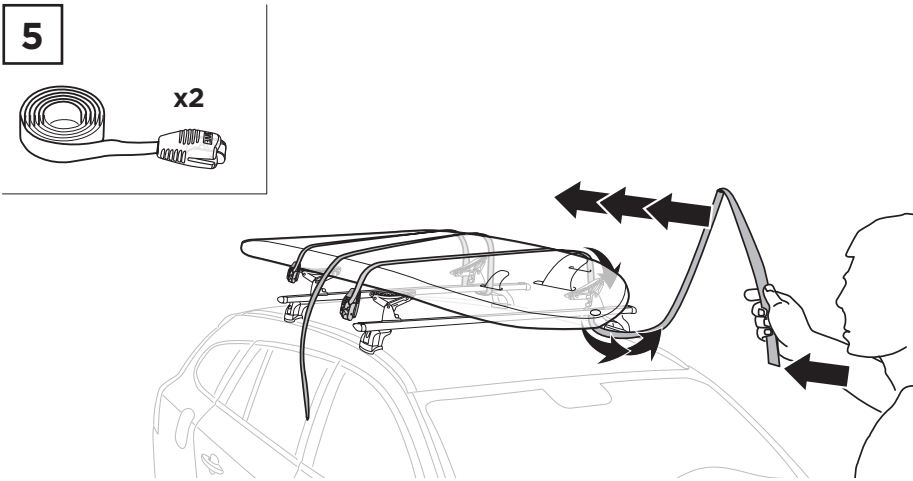
5
x2

6

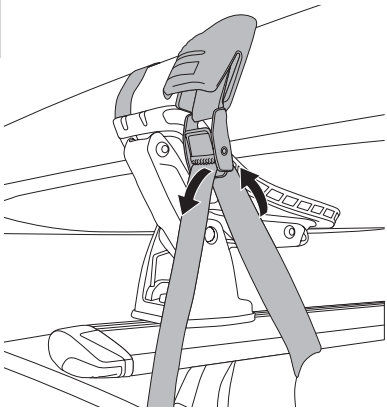

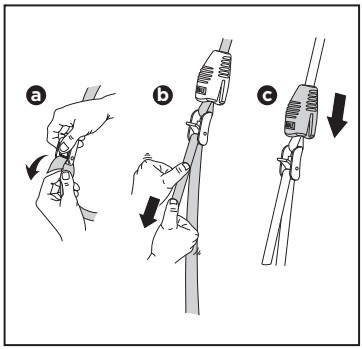

7





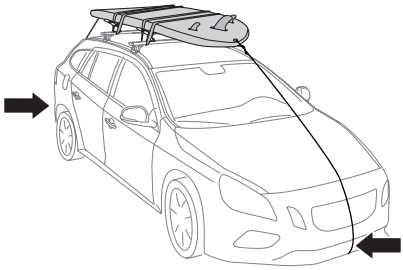



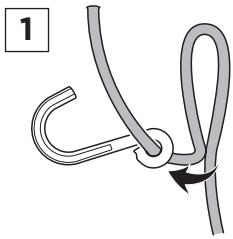

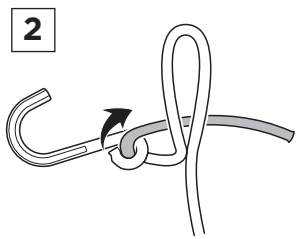

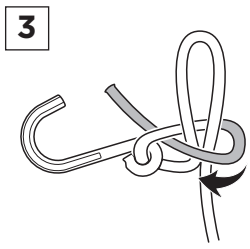

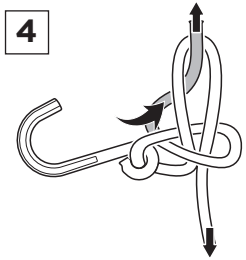

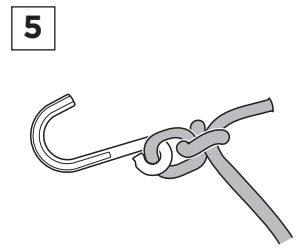

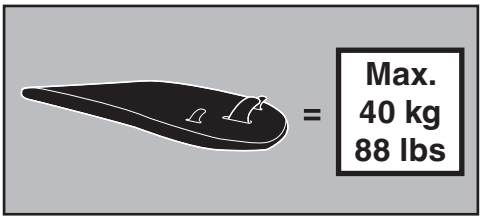
=
Max.
40 kg
88 lbs

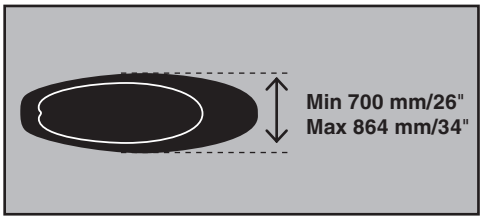
Min 700 mm/26"
Max 864 mm/34"

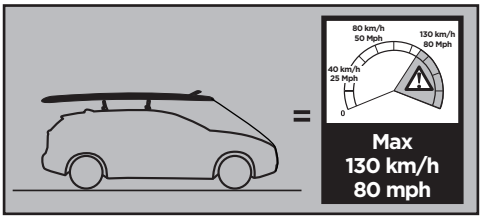
80 km/h
50 Mph
130 km/h
80 Mph
40 km/h
25 Mph
0
=
Max
130 km/h
80 mph

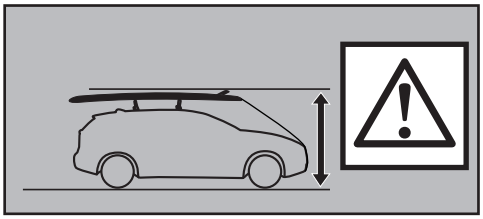

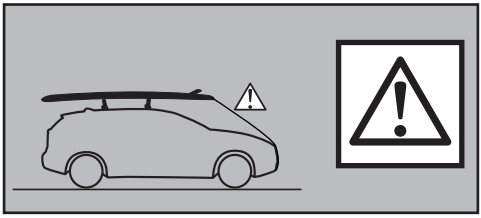

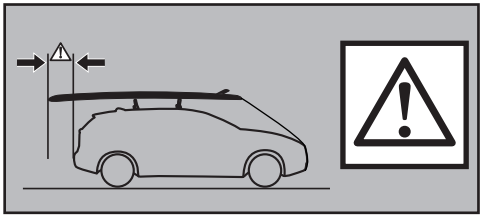

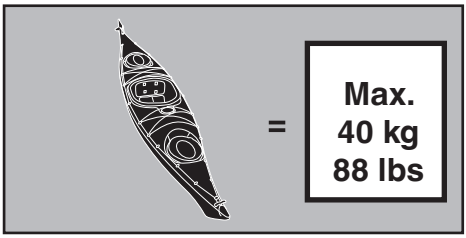
=
Max.
40 kg
88 lbs

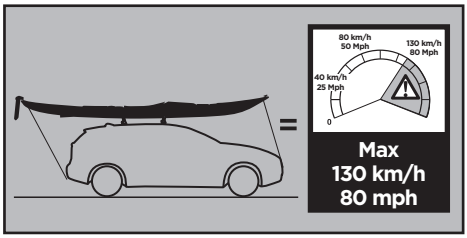
80 km/h
50 Mph
130 km/h
80 Mph
40 km/h
25 Mph
0
=
Max
130 km/h
80 mph

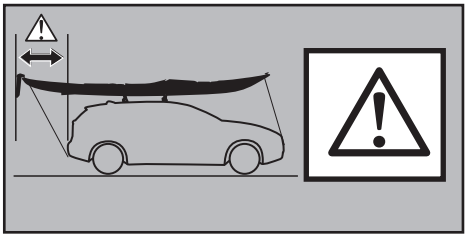

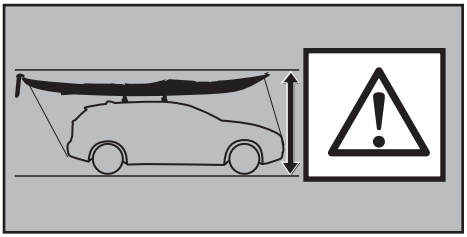

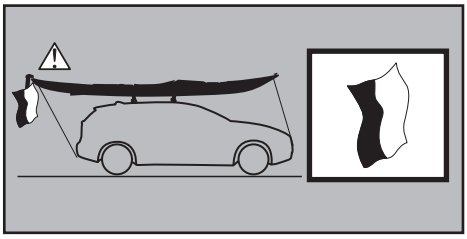

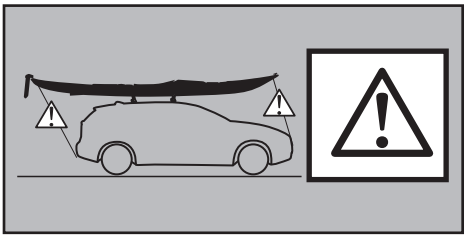

GB	Accessories	**RU**	Аксессуары
D	Zubehör	**CZ**	Doplňky
F	Accessoires	**SK**	Príslušenstvo
NL	Accessoires	**SLO**	Dodatki
I	Accessori	**HR**	Dodaci
E	Accesorios	**HU**	Tartozékok
PT	Acessórios	**GR**	Παρελκόμενα
S	Tillbehör	**TR**	Aksesuarlar
FIN	Lisävarusteet	**中文**	附件
EST	Lisavarustus	**日本語**	付属品
LAT	Piederumi	**한국어**	액세서리
LIT	Priedai	**ไทย**	อุปกรณ์เสริม
PL	Akcesoria		

8897
SquareBar Adapter



841



x2

855



x2

WW NA
Thule Sweden AB, Box 69, 330 33 Hillerstorp, SWEDEN
Thule Inc., 42 Silvermine Road, Seymour, Connecticut 06483, USA
info@thule.com
Phone: 800-238-2388
www.thule.com

» PART OF THULE GROUP
© Thule Group 2016. All rights reserved.

506-7226-01