Instructions

Thule Bexey stroller kit

800002, 800003

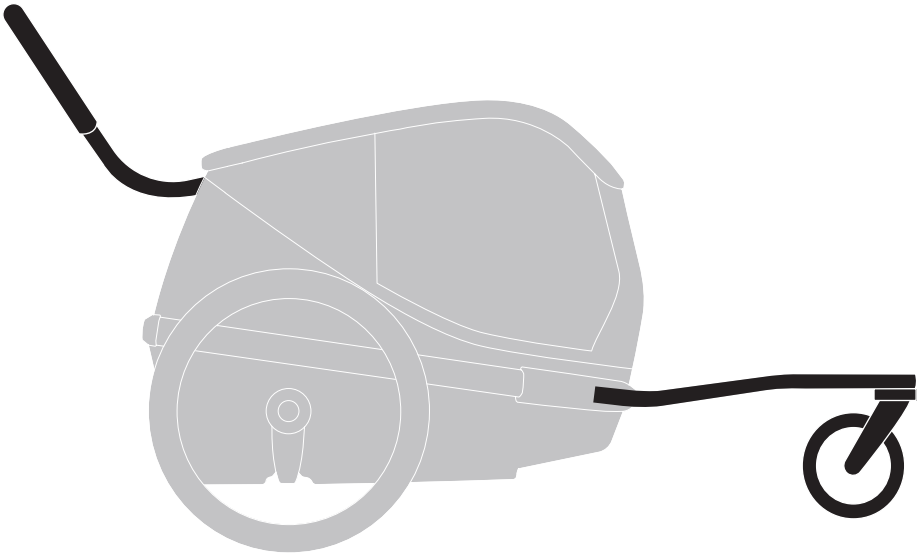

THULE GUARANTEE
THULE.COM

Bring your life
thule.com

5563809001

Instructions
Thule Bexey

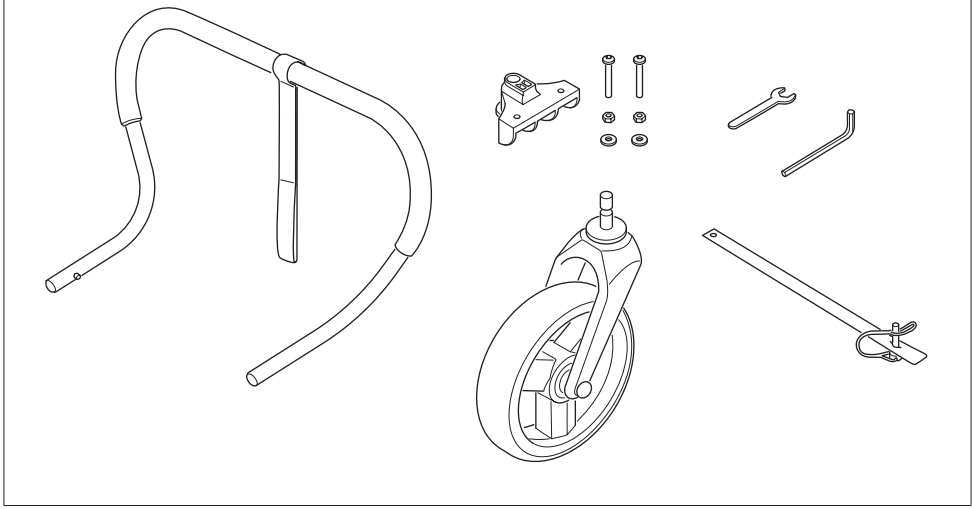

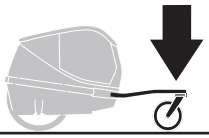

1

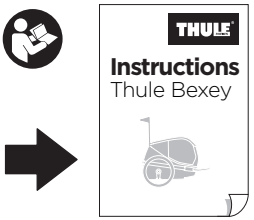

2

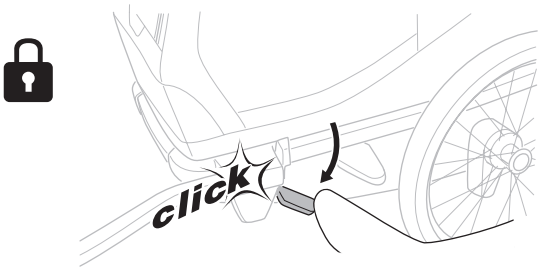

3

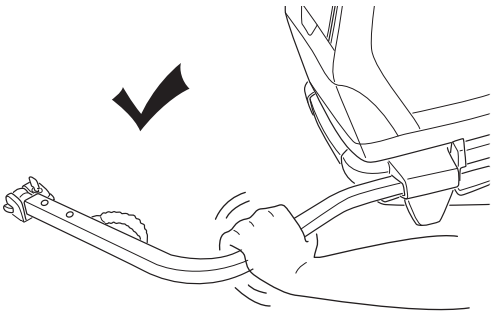

4

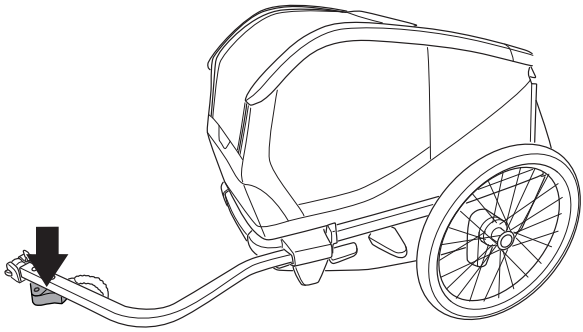

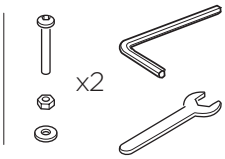

A

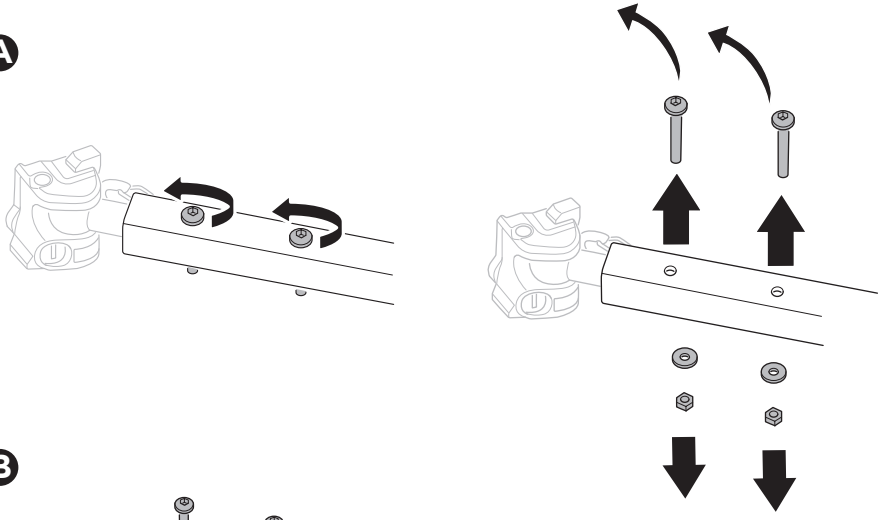

B

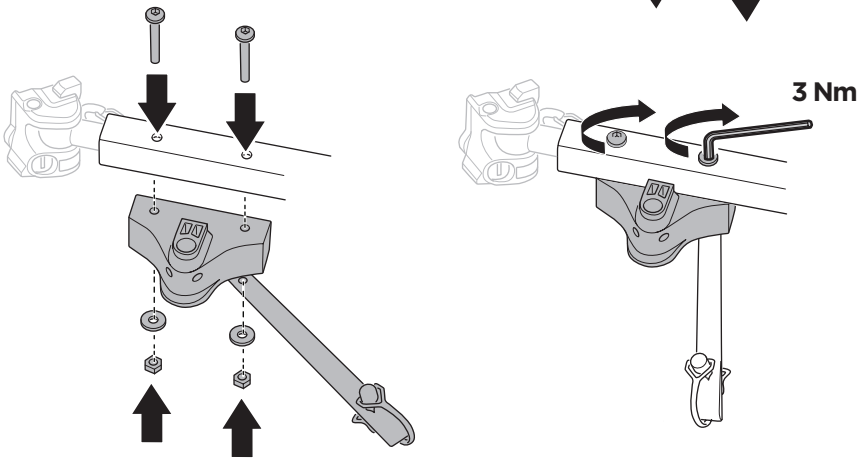

5

Ⓐ

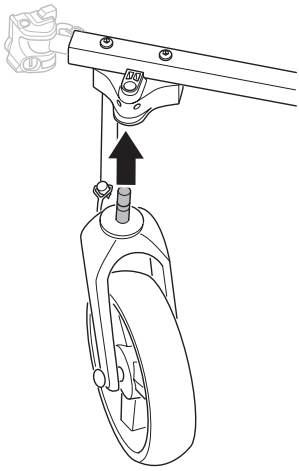

Ⓑ

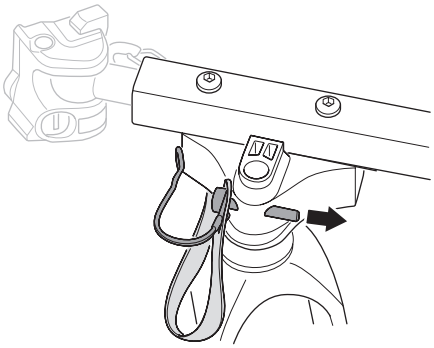

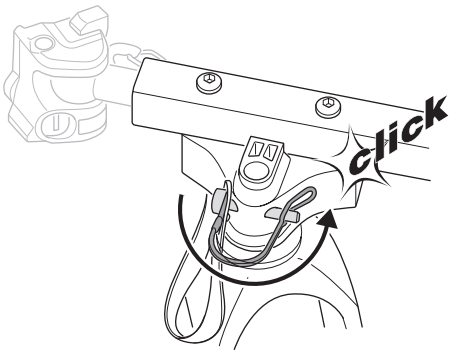

C

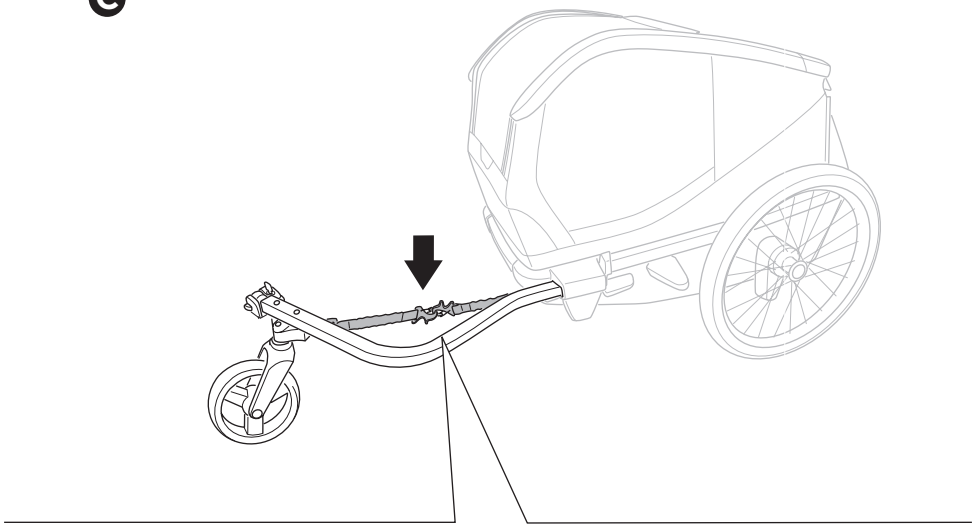

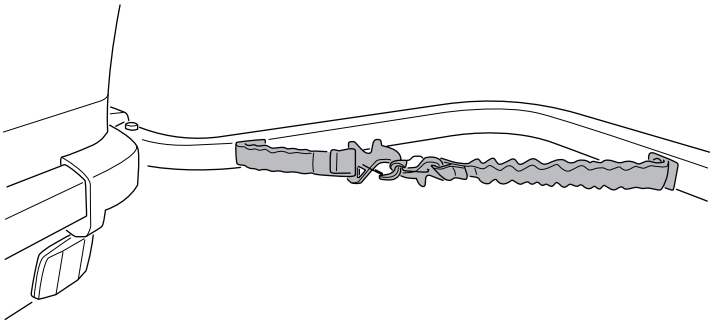

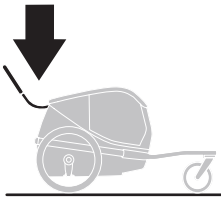

1

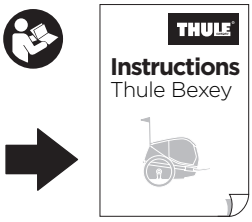

2

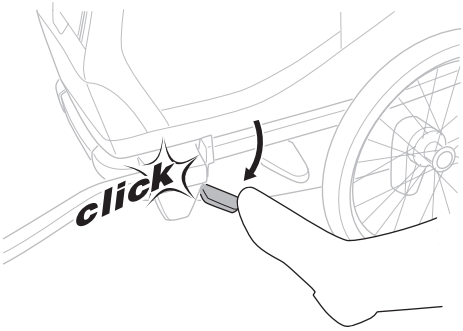

3

Ⓐ

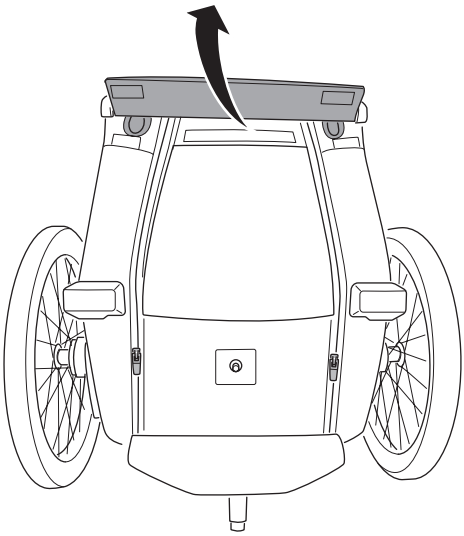

Ⓑ

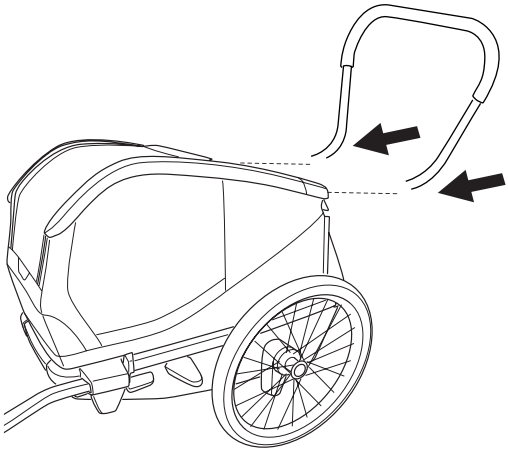

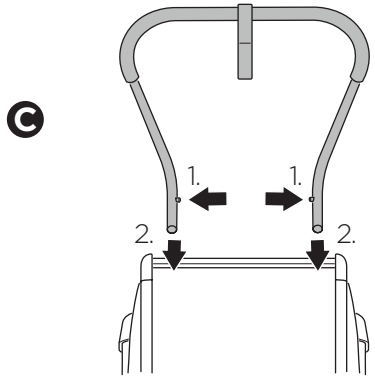
C
1.
1.
2.
2.

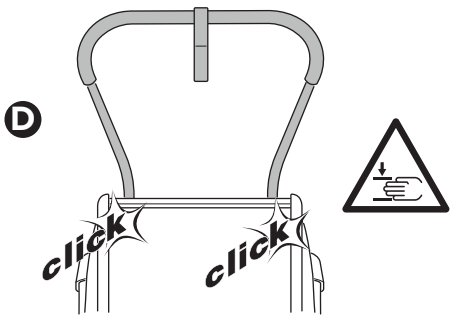
D
click
click

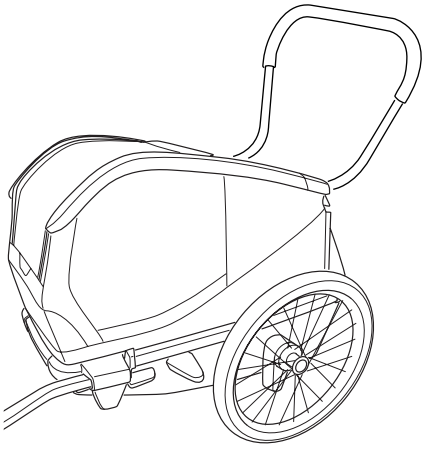

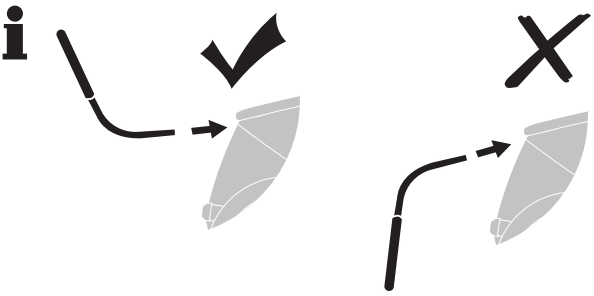



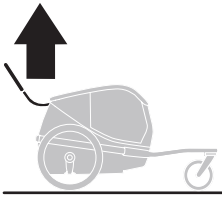

1

A

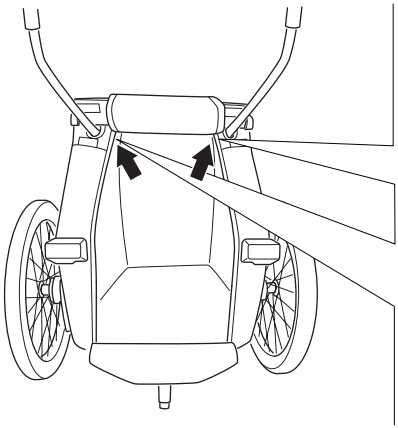

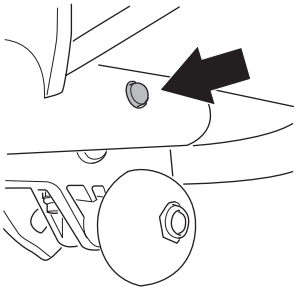

B

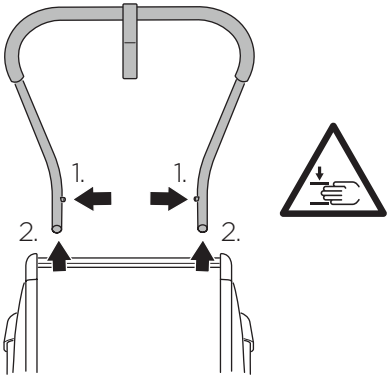

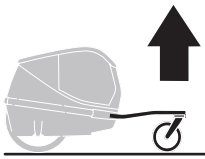

1

A

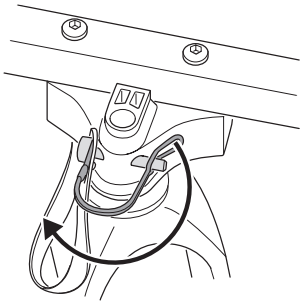

B

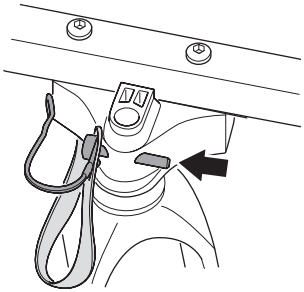

C

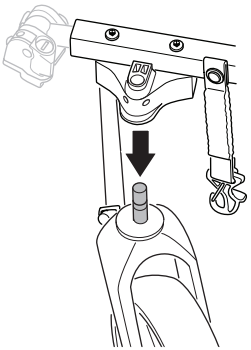

D

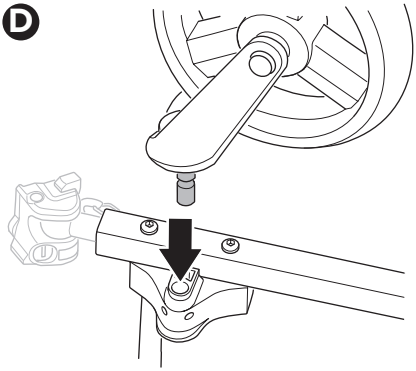

E

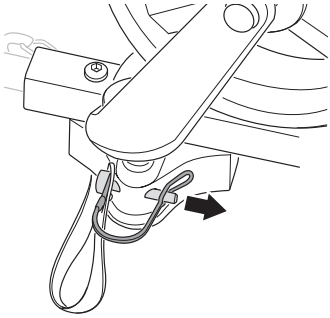

Thule Sweden AB
Borggatan 5
335 73 Hillerstorp, Sweden
info@thule.com
www.thule.com

© Thule Group May 2024. All rights reserved.

PART OF THULE GROUP