› Instructions

Thule Caprock rail mount 181006



THULE GUARANTEE
THULE.COM

5565068001

Bring your life
thule.com

TOYOTA Tacoma Crew Cab (Mk.IV), 4-dr Pickup. 24-



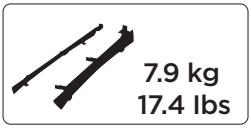

Instructions
Thule Caprock rail mount



Instructions
Thule Caprock



Safety

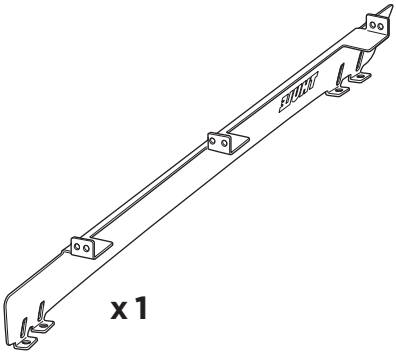

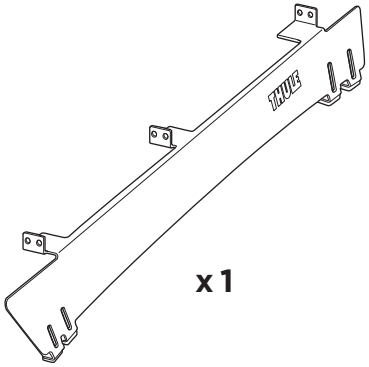









5 mm
¼"

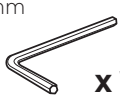

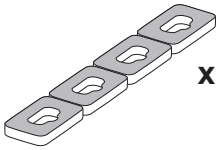





1

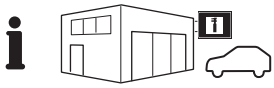

A

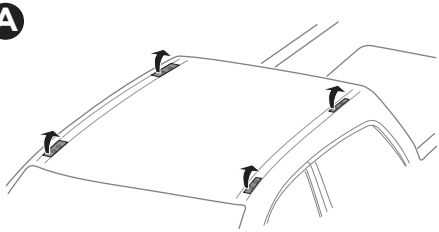

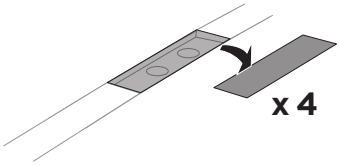

B

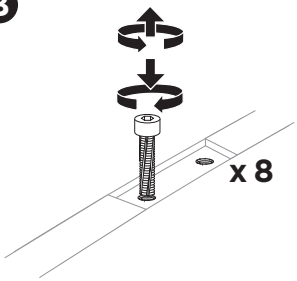

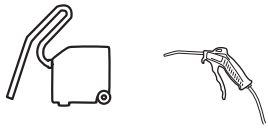

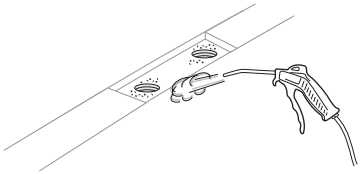



C

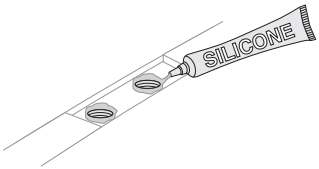



2

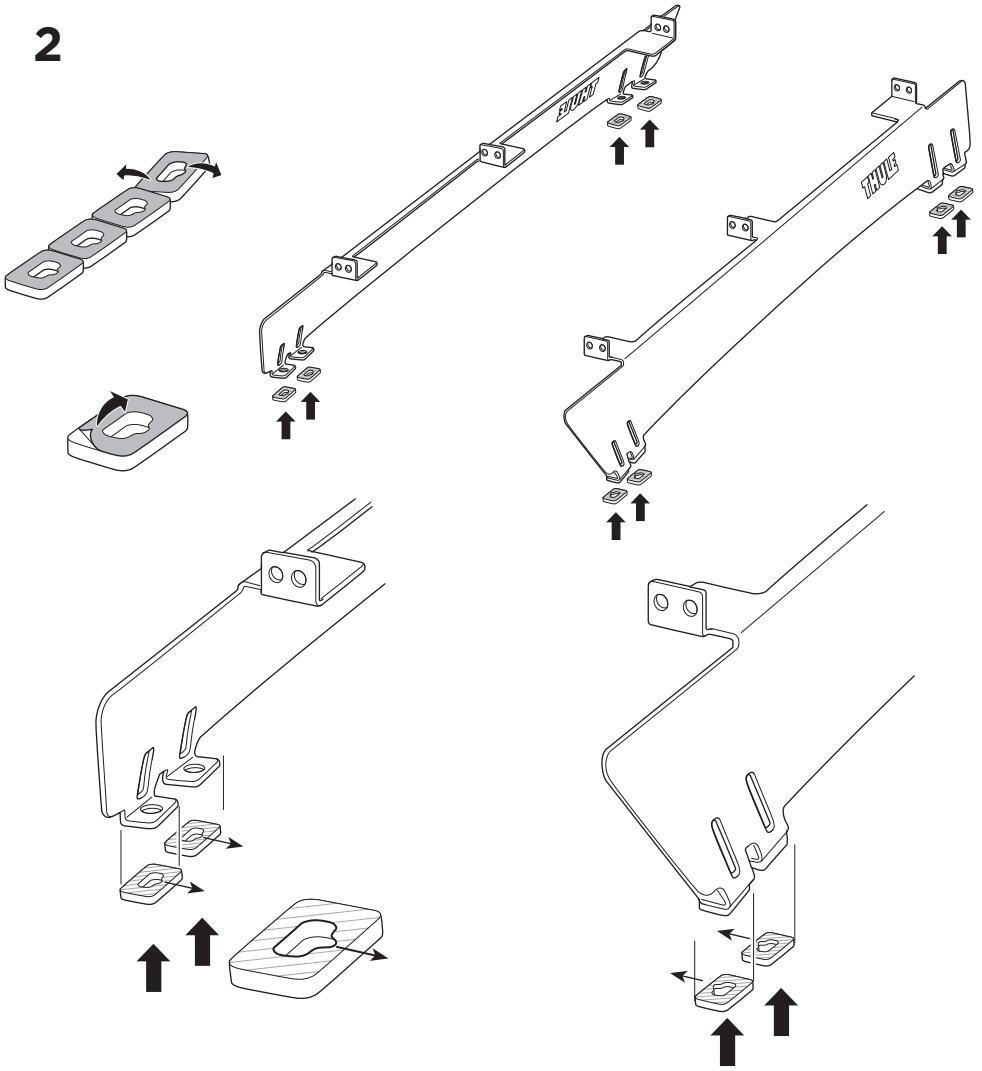

3

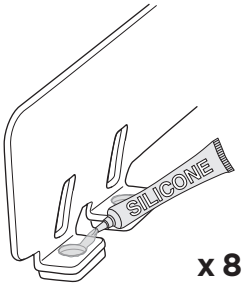

x 8



4

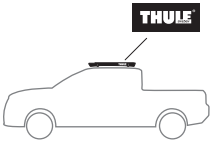



x 8



x 8

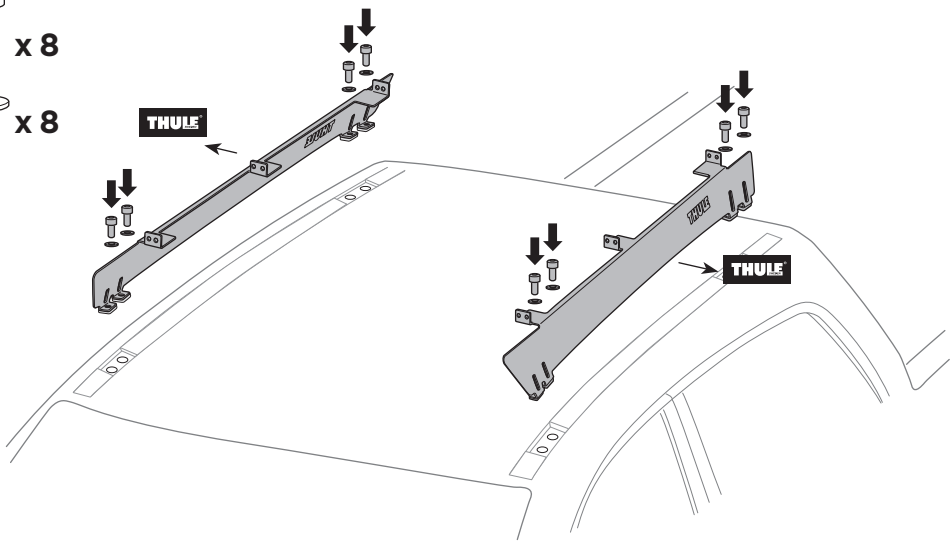

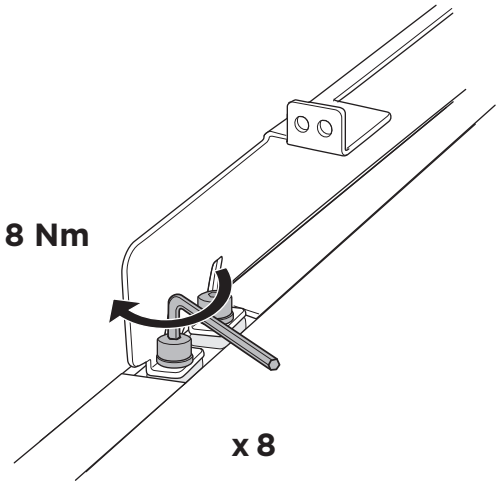

8 Nm

x 8

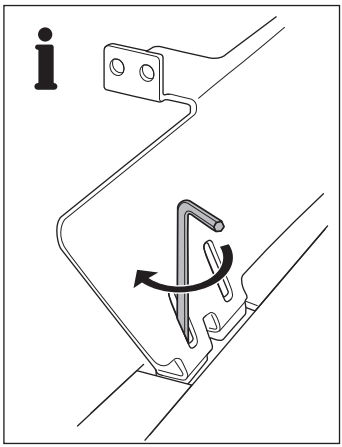

5

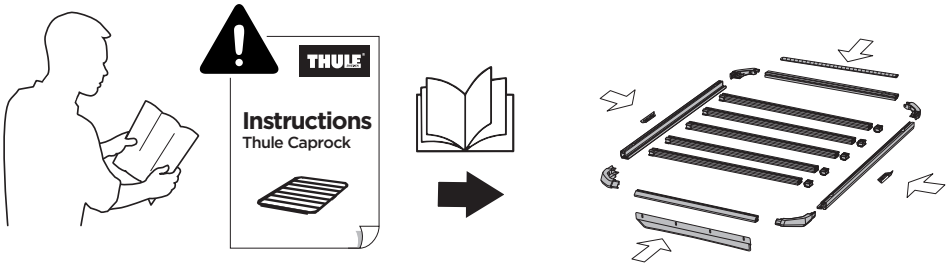

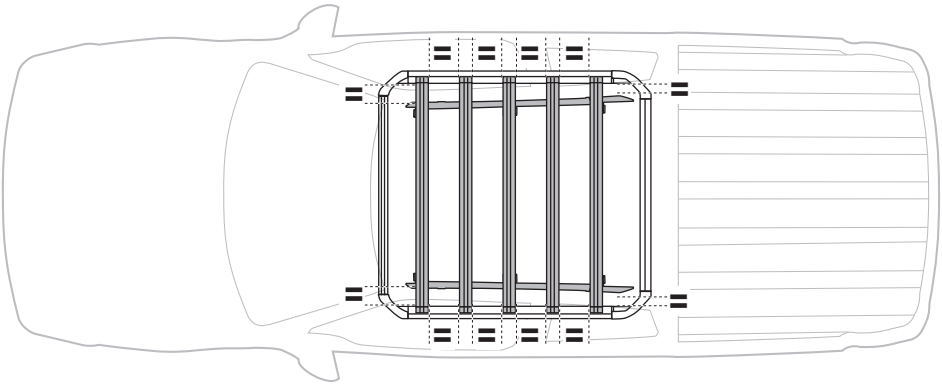

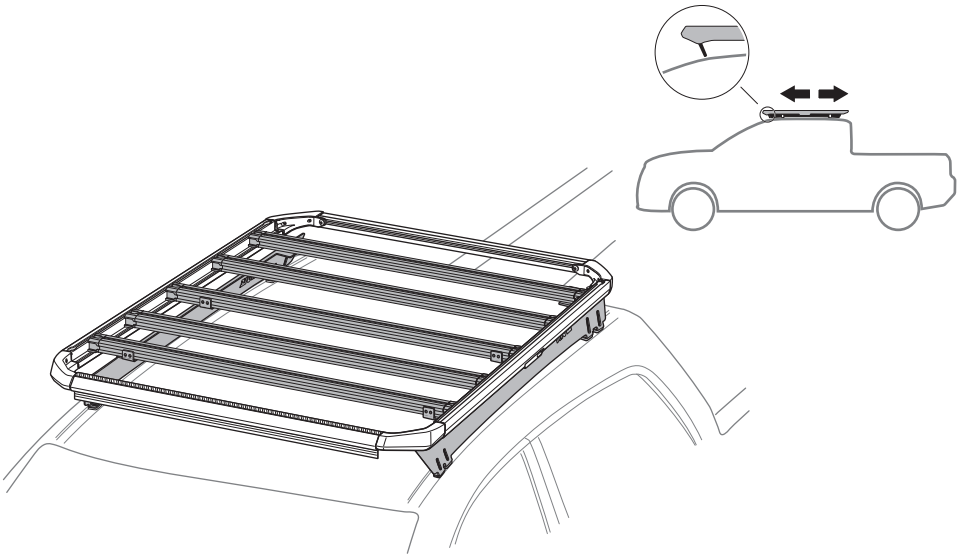

6

x 12

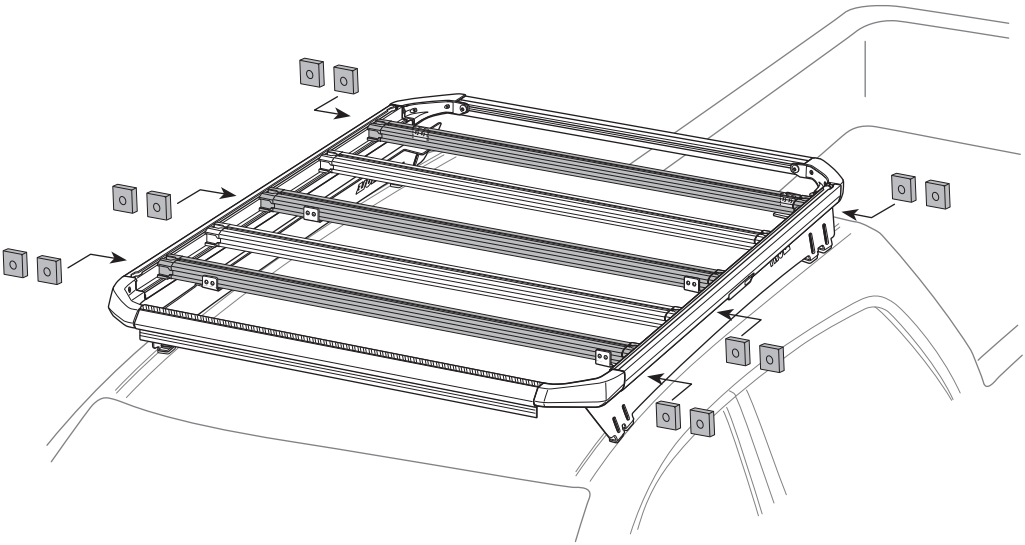

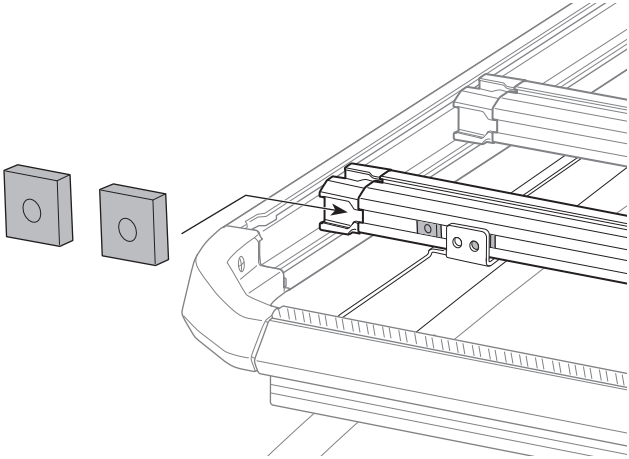

7

x 12

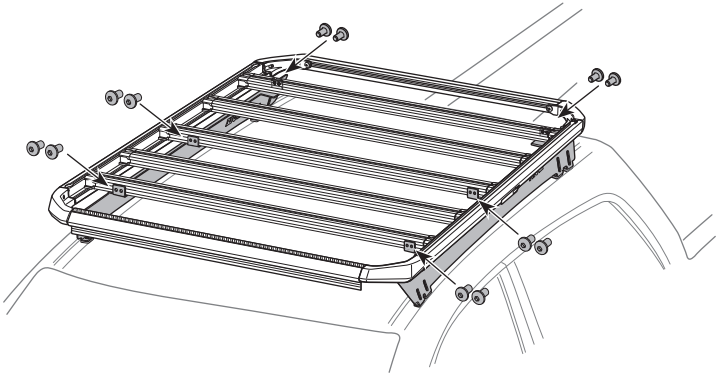

15 Nm

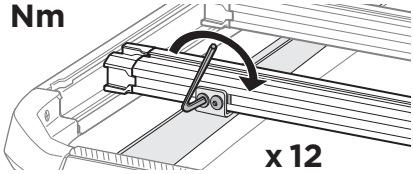

x 12

8







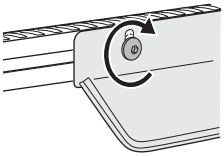

15 Nm

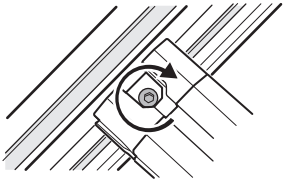

15 Nm

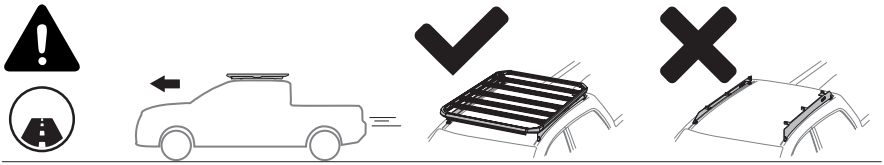

Thule Sweden AB. Borggatan 5, 335 73 Hillerstorp, SWEDEN
info@thule.com | *www.thule.com*

Thule Inc. 42 Silvermine Road, Seymour, CT 06483
Thule Canada Inc. 710 Bernard, Granby QC J2J 0H6
North American Consumer Service:
Toll Free 800-238-2388, Fax 450-777-3615
www.thule.com

Register online at:
www.thule.com/register

© Thule Group. All rights reserved.
5565068001 | 2025-03-10 #00

» PART OF THULE GROUP