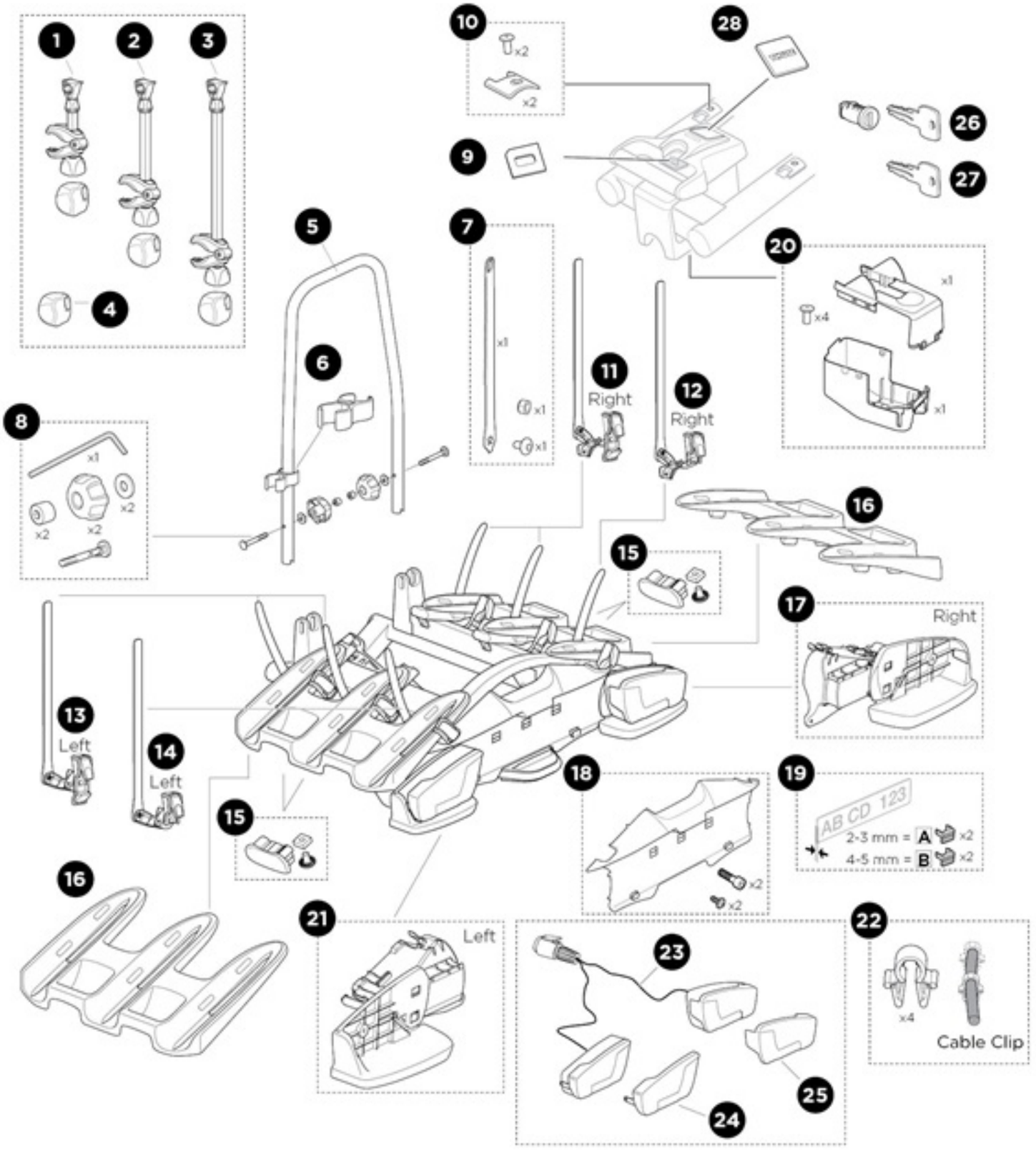
1
2
3
4
5
6
7
x1
x1
x1
8
x1
x2
x2
x2
9
10
x2
x2
11
Right
12
Right
13
Left
14
Left
15
15
16
16
17
Right
18
x2
x2
19
AB CD 123
2-3 mm = A x2
4-5 mm = B x2
20
x1
x4
x1
21
Left
22
x4
Cable Clip
23
24
25
26
27
28

Alkatrész	SKU
1. Bike arm short	1500052695
2. Bike Arm middle	1500052625
3. Bike Arm Long	1500052626
4. Lockable knob XT w/o lock	1500052739
5. Bike Frame	1500052595
6. Cable Socket Holder	1500052363
7. Wheel Strap	1500052623
8. Assembly Bag	1500052587
9. Release lever plate	1500054564
11. Wheel Strap Attachment Right	1500052589
12. Wheel Strap Attachment Right	1500052591
13. Wheel Strap Attachment Left	1500052588
14. Wheel Strap Attachment Left	1500052590
15. Wheel Tube End Cap	1500052611
16. Wheel Holder 3B	1500052600
17. Lamp Holder Set 13-Pin Right	1500052629
18. Number Plate Holder	1500052977
19. Replacement clips	1500052598
20. Top & Bottom cover incl Fastner	1500054563
21. Lamp Holder Set 13-Pin Left	1500052628
22. Cable clip	1500052540
23. Lamp Set Midipoint 13-pin	1500052630
24. MtgBag Lampcover L	1500054656
25. MtgBag Lampcover R	1500054655
26. Lock Cylinder	Go to "Keys & Locks"
27. Key	Go to "Keys & Locks"
28. Handle plate cover	1500054562