› Instructions

Thule dog crate bumper protector

770100, 770101

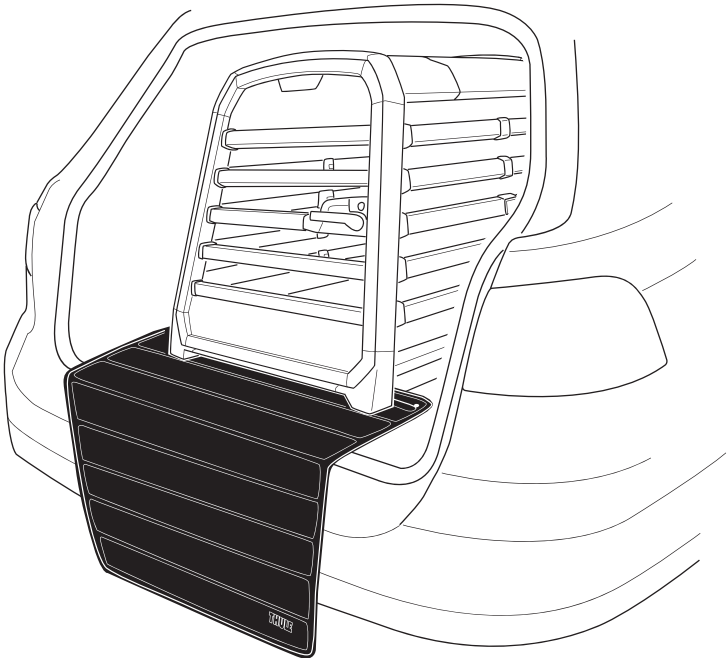

THULE GUARANTEE
THULE.COM

5562661001

Bring your life
thule.com



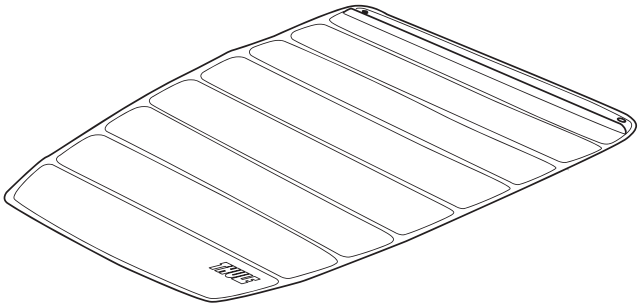

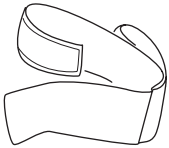



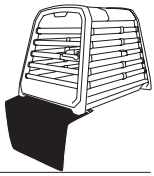

1

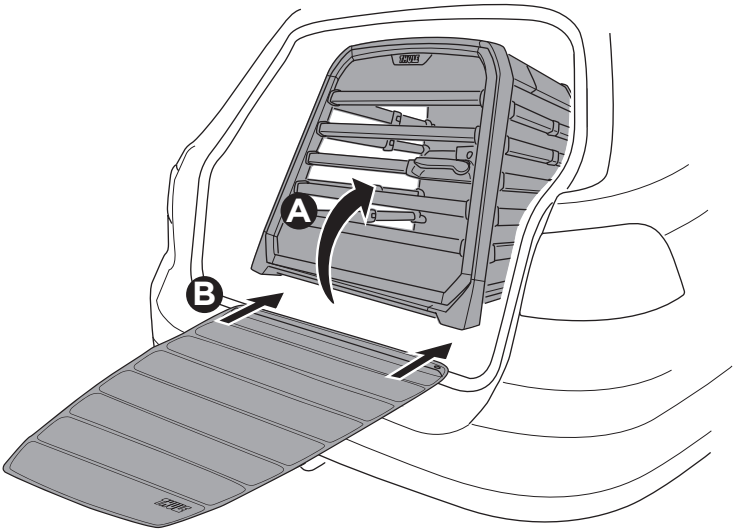

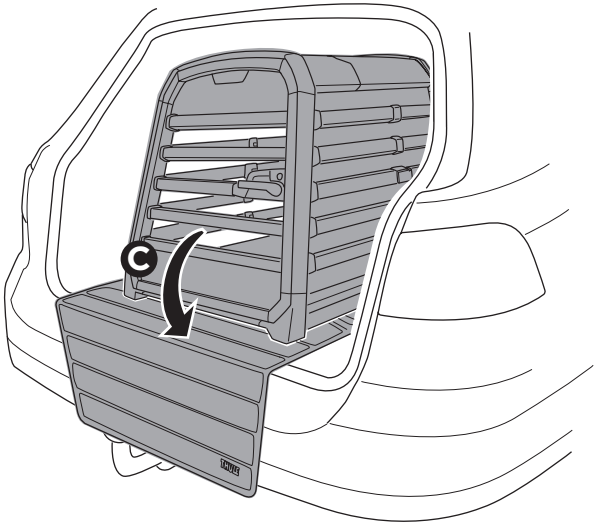

2

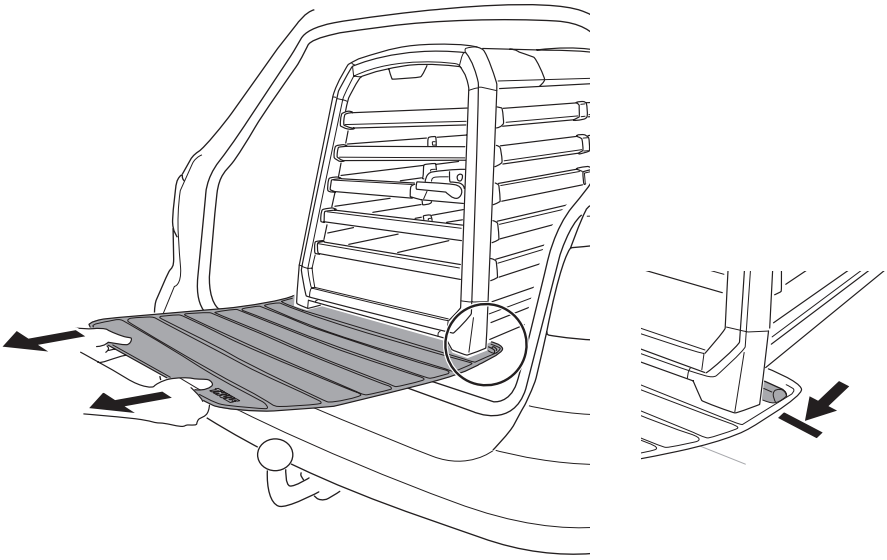

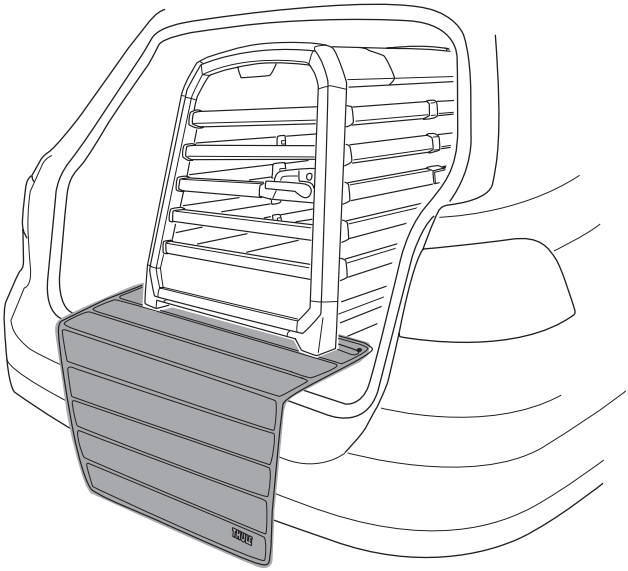



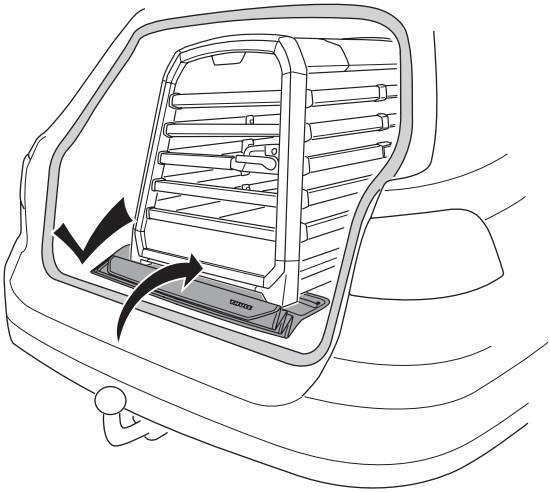

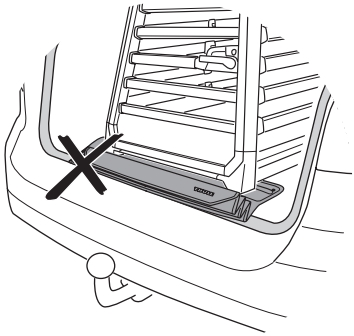

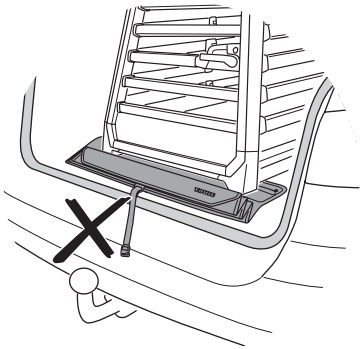

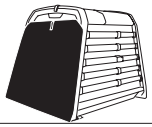

1



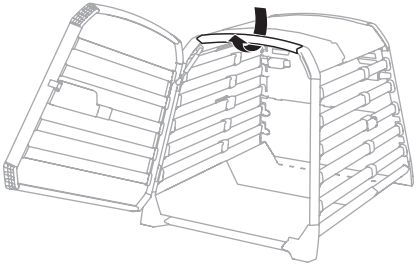

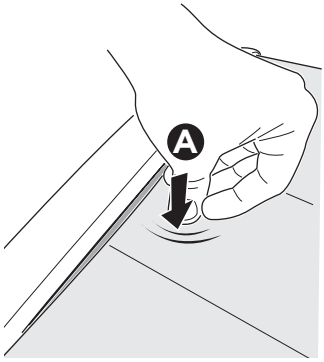

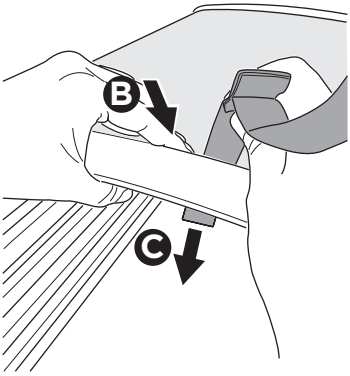

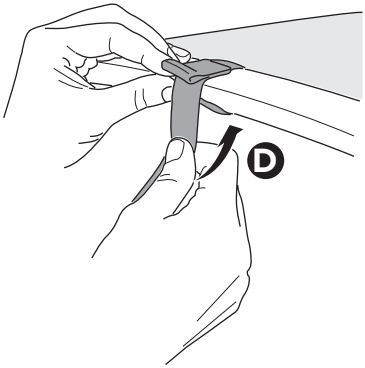

2



A

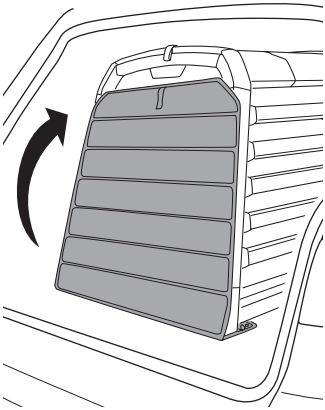

B

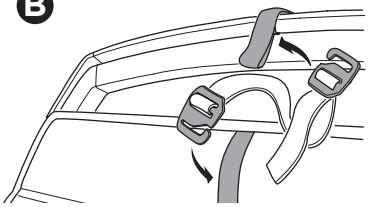

C

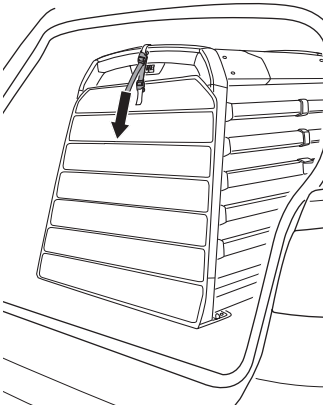

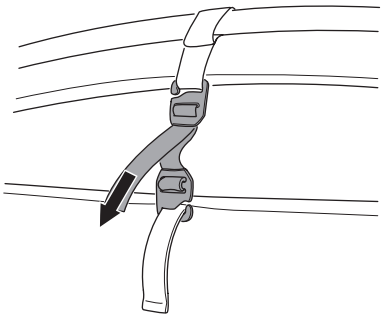

i

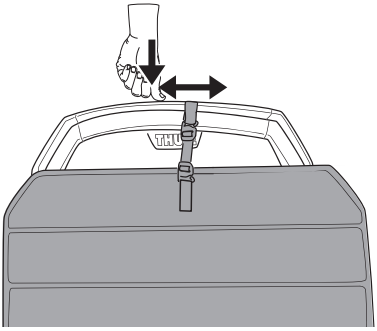

Thule Sweden AB
Borggatan 5
335 73 Hillerstorp, Sweden
info@thule.com
www.thule.com

© Thule Group Apr. 2023. All rights reserved.

PART OF THULE GROUP