1 Kit 5130

SCION iM, 5-dr Hatchback, 16–
TOYOTA Auris, 5-dr Hatchback, 13–
TOYOTA Corolla, 5-dr Hatchback, 13–

ISO 11154-E

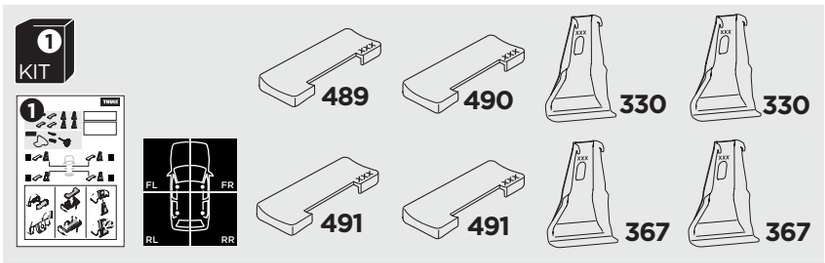

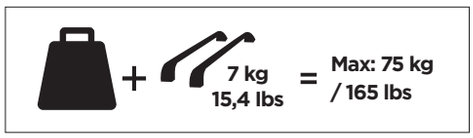

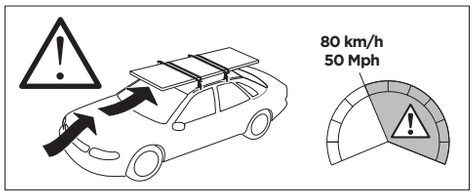

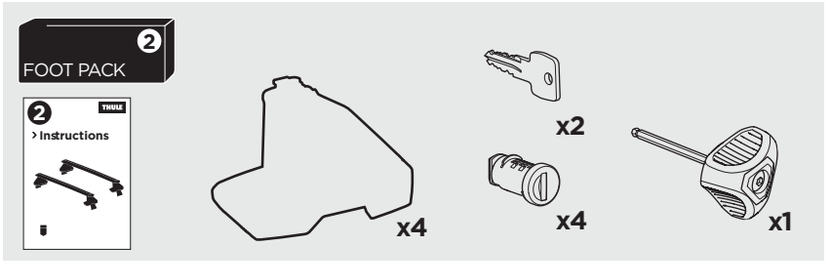

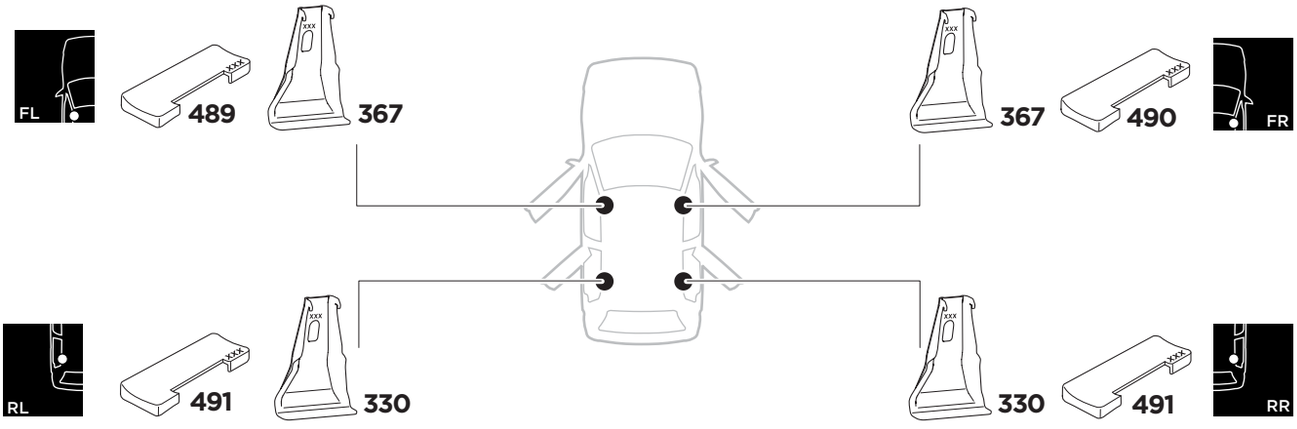

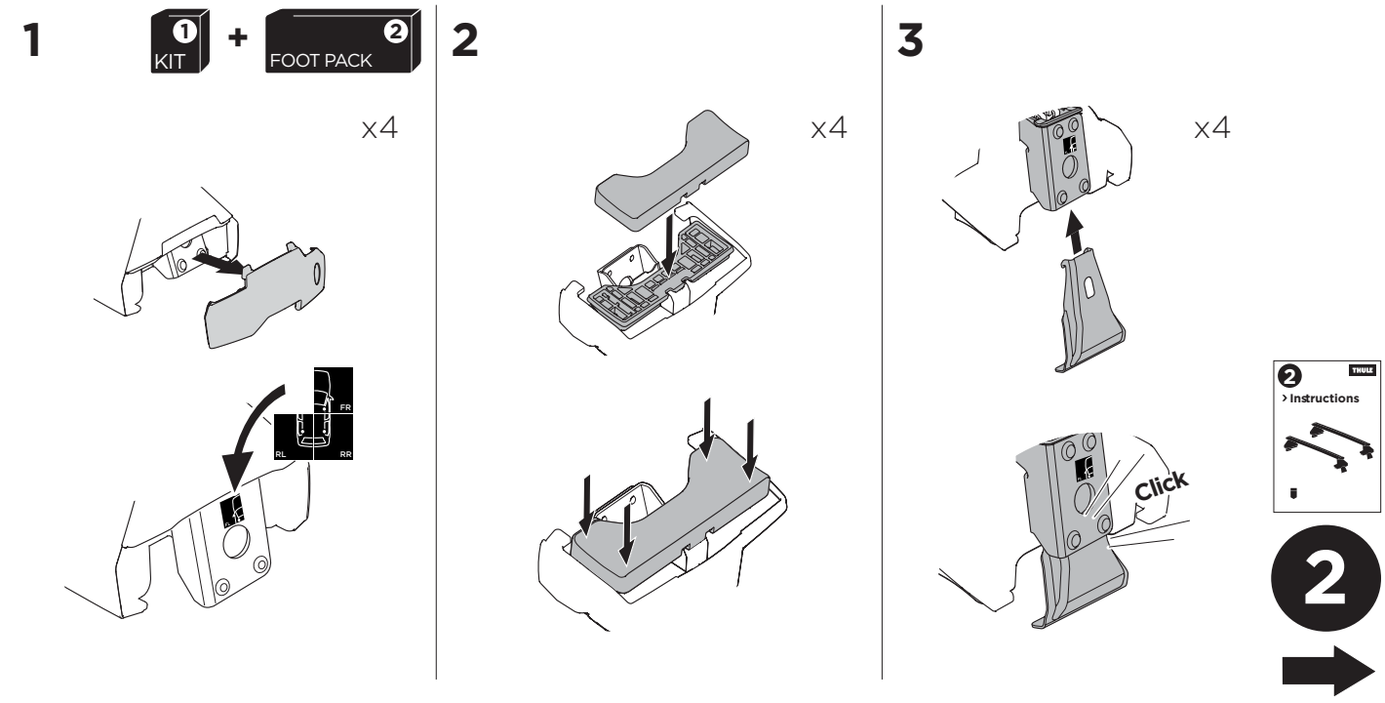

521-5130-01

Bring your life
thule.com

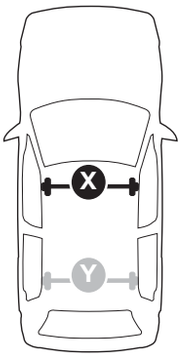

THULE WingBar Evo / THULE WingBar Edge / THULE WingBar / THULE SquareBar	Evo X (scale)	Edge X (scale)
SCION iM, 5-dr Hatchback, 16–	31	Q
TOYOTA Auris, 5-dr Hatchback, 13–	31	Q
TOYOTA Corolla, 5-dr Hatchback, 13–	31	Q

THULE ProBar / THULE SlideBar	X (mm/inch)
SCION iM, 5-dr Hatchback, 16–	961 mm / 37 7/8“
TOYOTA Auris, 5-dr Hatchback, 13–	961 mm / 37 7/8“
TOYOTA Corolla, 5-dr Hatchback, 13–	961 mm / 37 7/8“

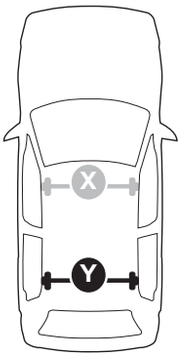

THULE WingBar Evo / THULE WingBar Edge / THULE WingBar / THULE SquareBar	Evo Y (scale)	Edge Y (scale)
SCION iM, 5-dr Hatchback, 16–	28,5	D
TOYOTA Auris, 5-dr Hatchback, 13–	28,5	D
TOYOTA Corolla, 5-dr Hatchback, 13–	28,5	D

THULE ProBar / THULE SlideBar	Y (mm/inch)
SCION iM, 5-dr Hatchback, 16–	936 mm / 36 7/8“
TOYOTA Auris, 5-dr Hatchback, 13–	936 mm / 36 7/8“
TOYOTA Corolla, 5-dr Hatchback, 13–	936 mm / 36 7/8“

	W (mm/inch)	Z (mm/inch)
SCION iM, 5-dr Hatchback, 16–	745 mm / 29 3/8“	155 mm / 6 1/8“
TOYOTA Auris, 5-dr Hatchback, 13–	745 mm / 29 3/8“	155 mm / 6 1/8“
TOYOTA Corolla, 5-dr Hatchback, 13–	745 mm / 29 3/8“	155 mm / 6 1/8“

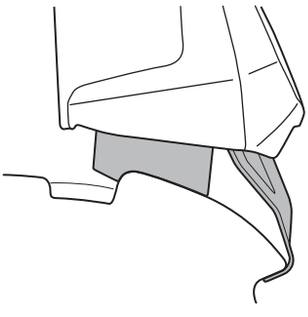

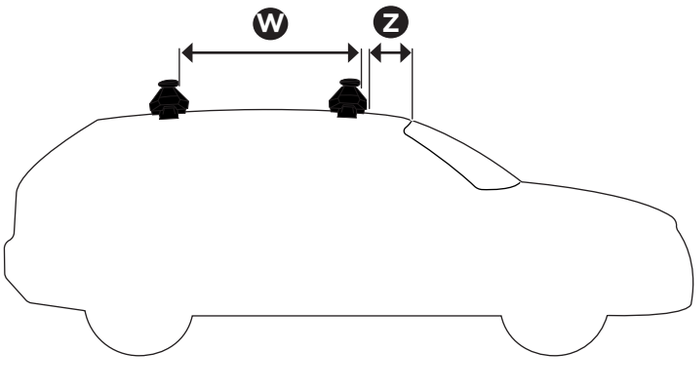



2

Thule Sweden AB, Borggatan 5
335 73 Hillerstorp, SWEDEN
» PART OF THULE GROUP

info@thule.com

www.thule.com

© Thule Group 2018. All rights reserved.

521-5130-01