› Instructions

Thule Santu EasyFold XT kit

9099

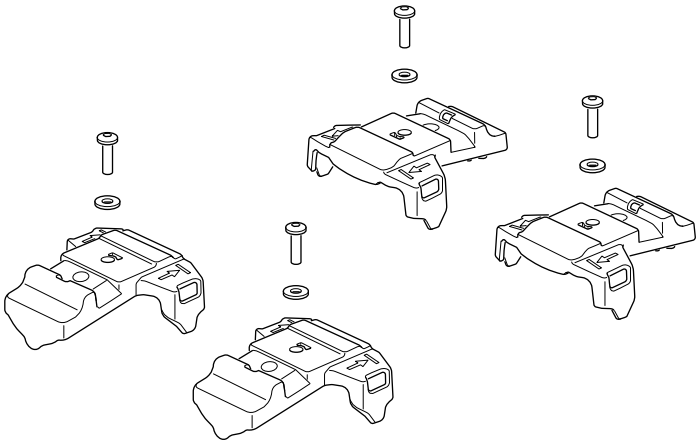

THULE GUARANTEE
THULE.COM

5563615001

Bring your life
thule.com

i





x 4



x 4

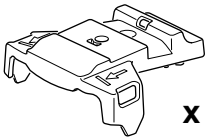

x 4

i

Thule Santu
EasyFold XT Kit
9099

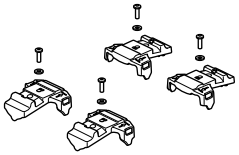

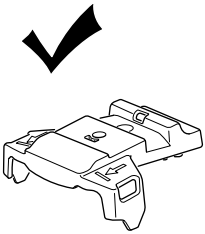

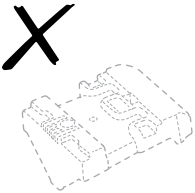

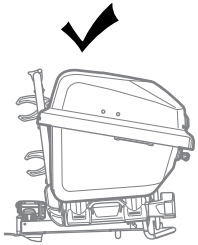

Thule EasyFold XT 2-bike
9331, 9333

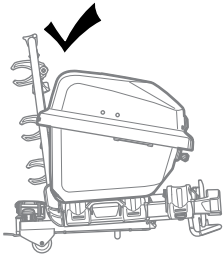

Thule EasyFold XT 3-bike
9341, 9343

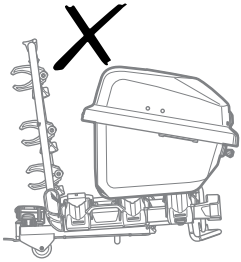

Thule EasyFold XT 3-bike
9341, 9343

1

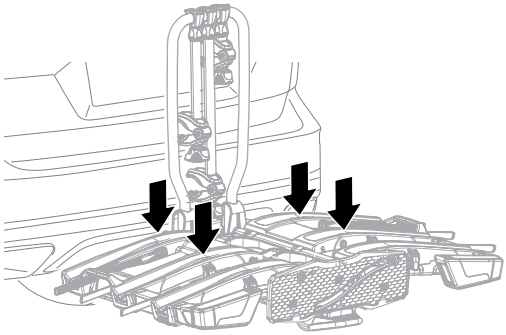



x 4

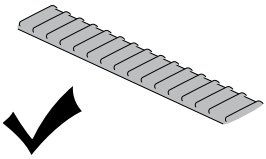

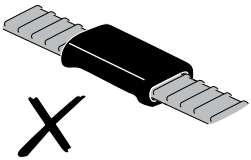

A

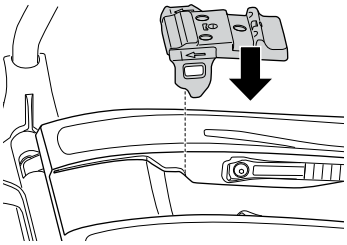

B

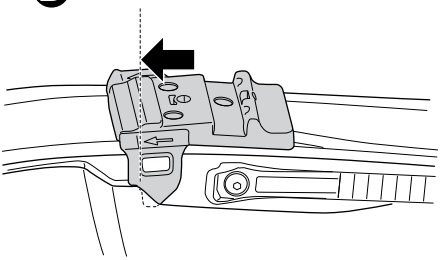

C

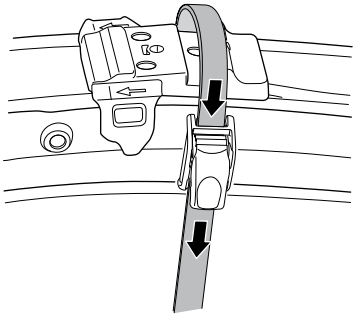

D

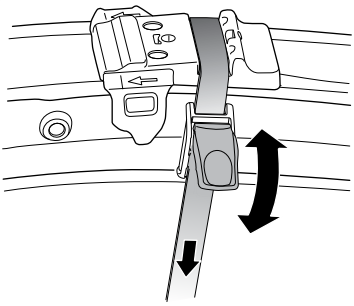

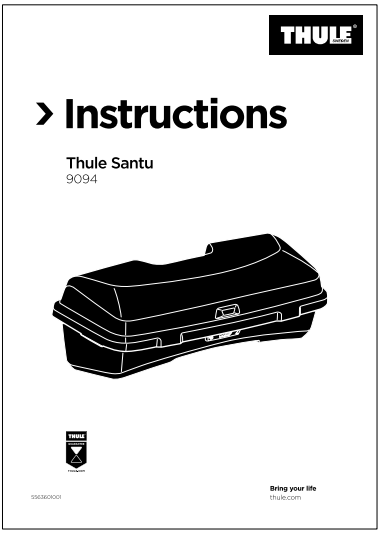

Thule Sweden AB
Borggatan 5, 335 73 Hillerstorp, SWE
info@thule.com | www.thule.com

© Thule Group. All rights reserved.
5563615001 | 2024-10-25 #01

» PART OF THULE GROUP