Thule Ladder Carrier 548

› Instructions

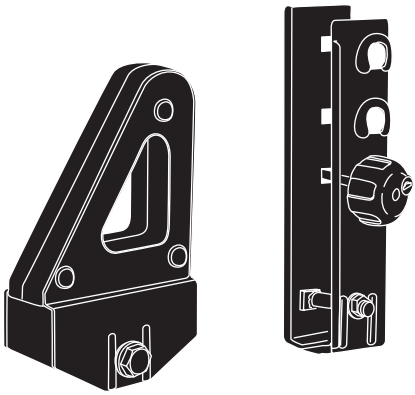

Ladder carrier



Thule SquareBar

54800, 548001

c.20150630
501-6222-04

Bring your life
thule.com

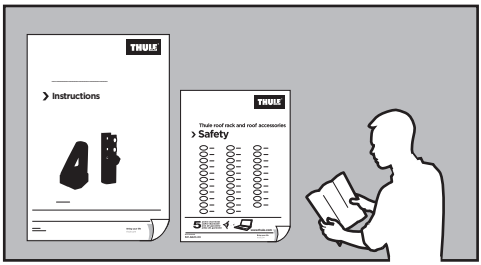
THULE
Instructions
THULE
Thule roof rails and roof accessories
Safety

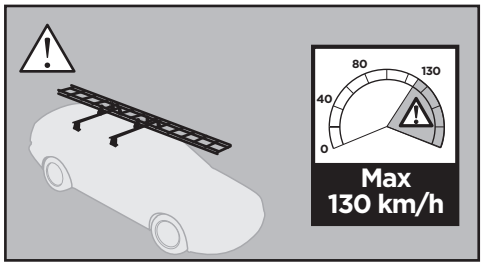
80
130
40
0
Max
130 km/h

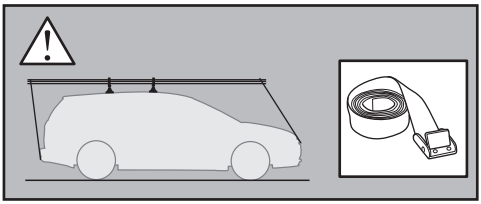

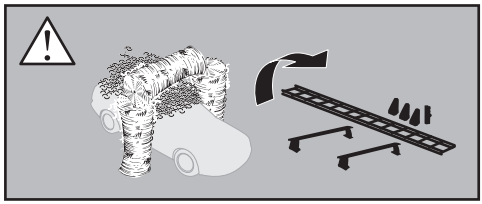

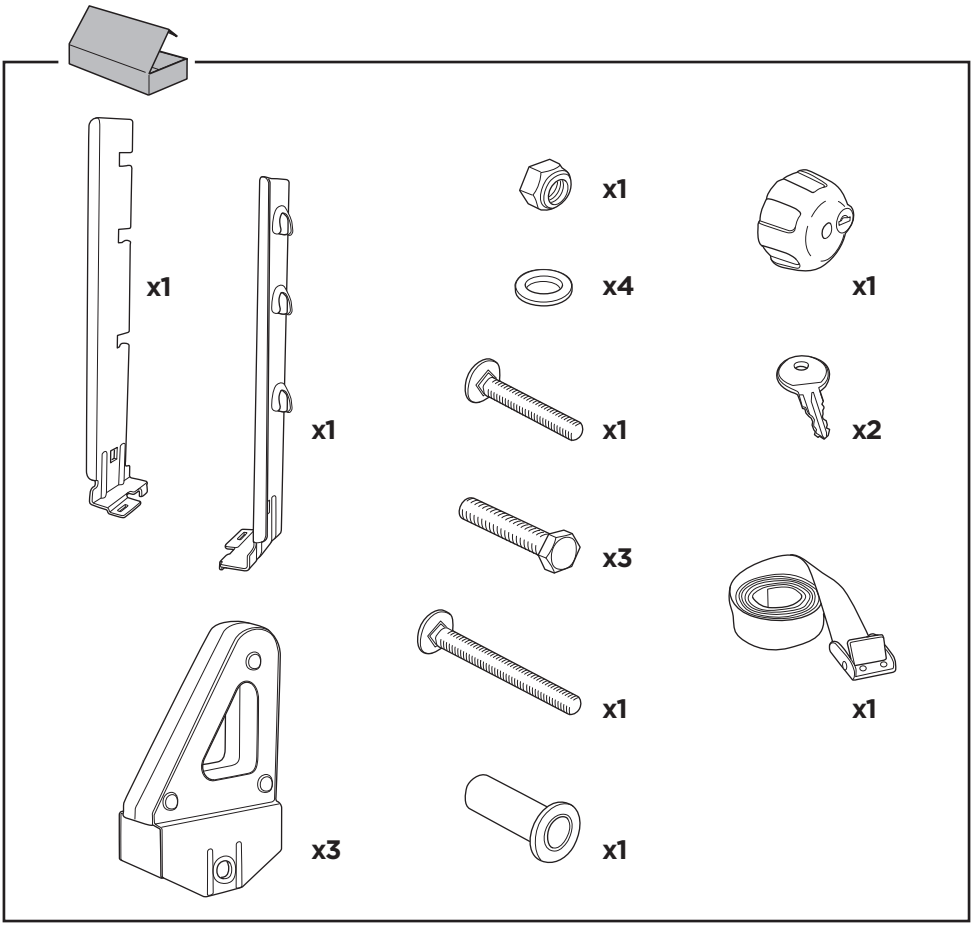
x1
x1
x1
x4
x1
x1
x2
x3
x1
x1
x3
x1

1

x1

x1

x1

x1

x1

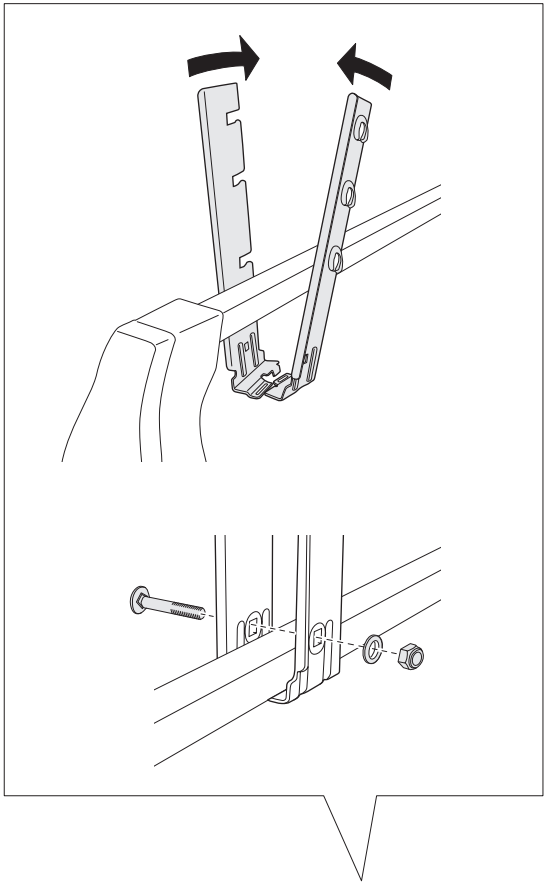

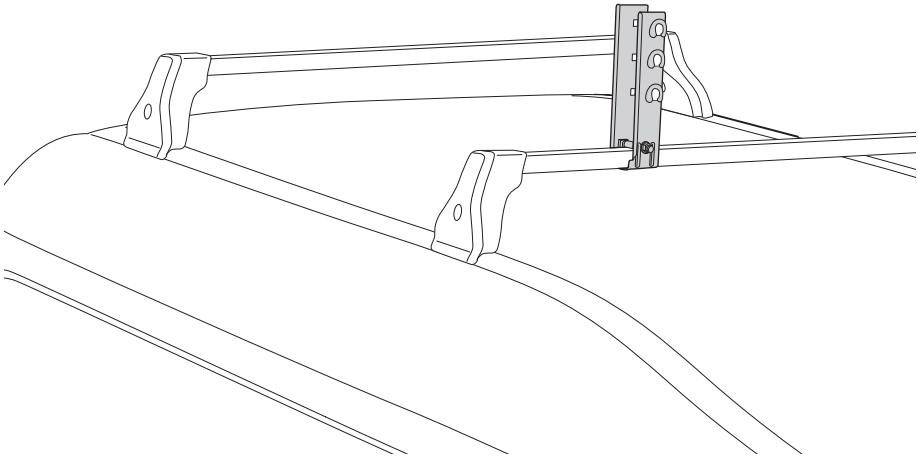

2



x1



x1



x1

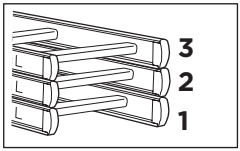

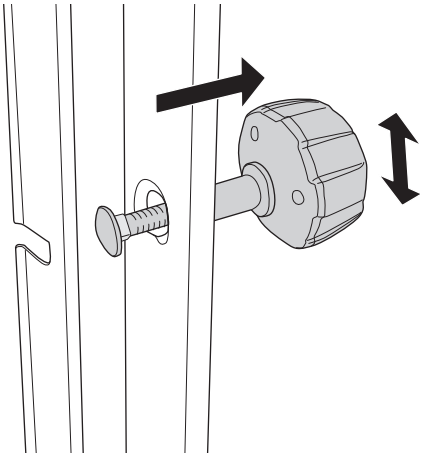

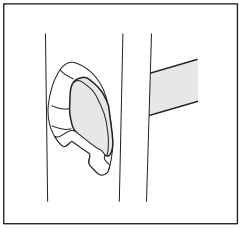

3

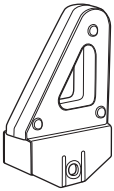

x3



x3



x3

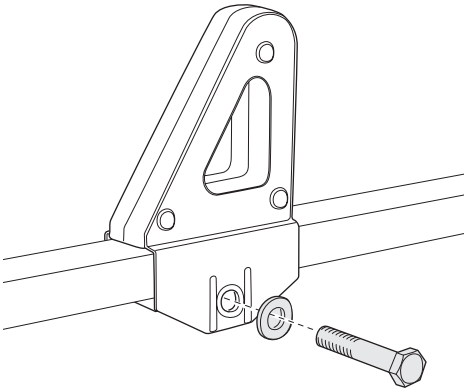

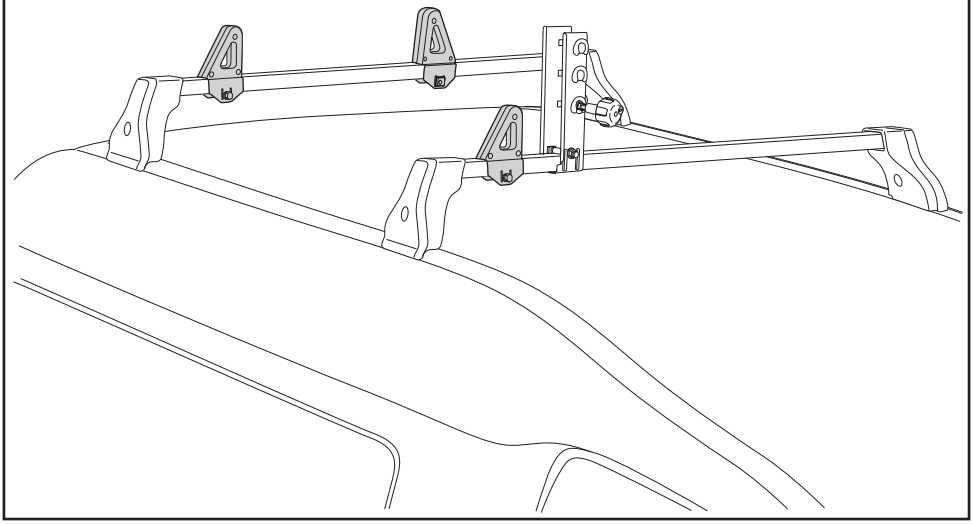

4

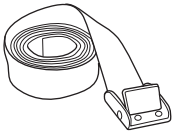

x1

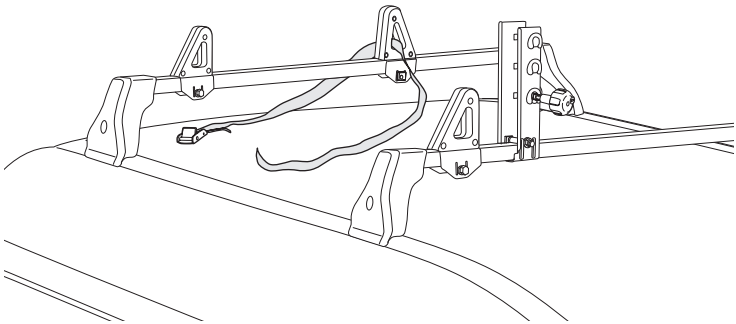

5

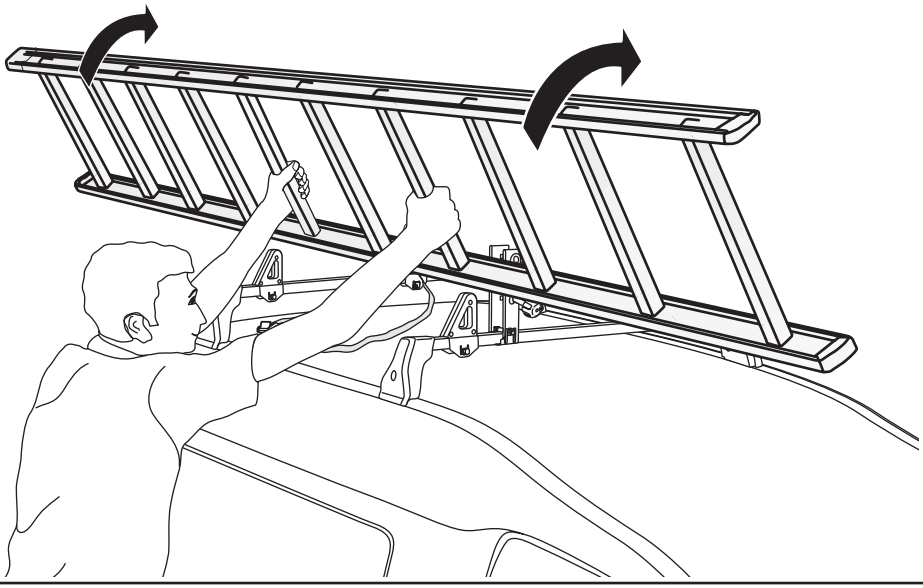

6

A

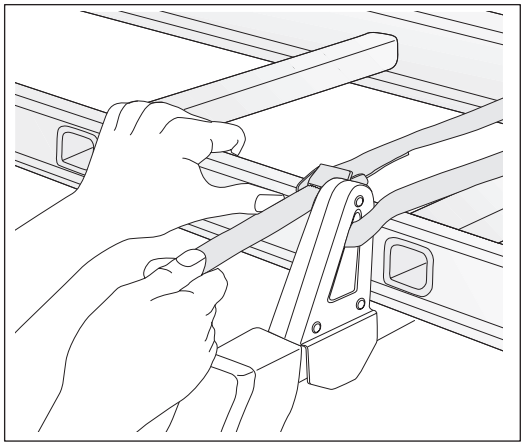

B

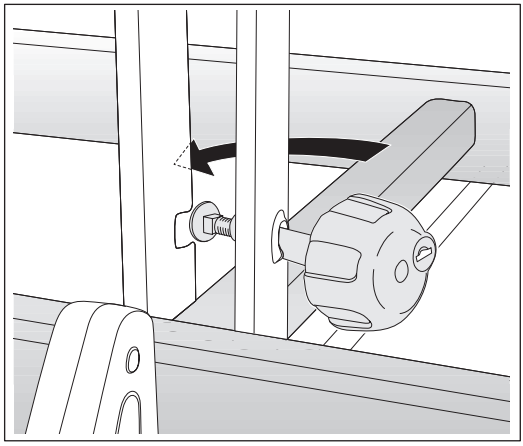

C

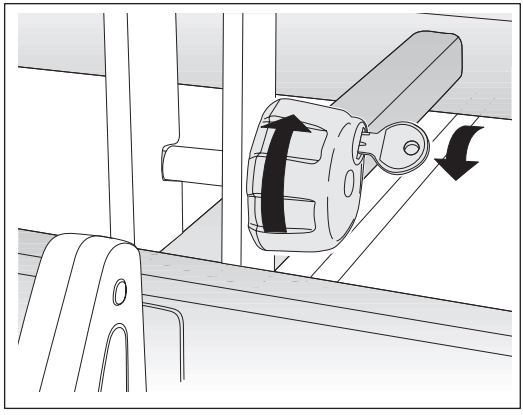



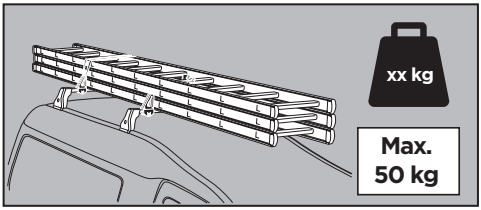

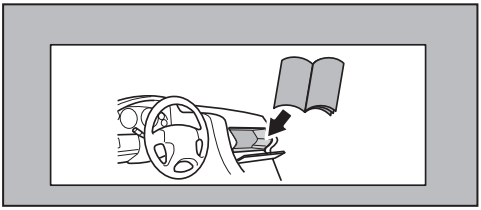

Thule One-Key System



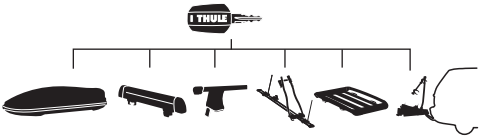

544 (x4)
596 (x6)
588 (x8)
452 (x12)

Thule Sweden AB, Box 69, 330 33 Hillerstorp, SWEDEN
info@thule.com
www.thule.com

» PART OF THULE GROUP
© Thule Group 2015. All rights reserved.