# Thule DockGlide 896000

# › Instructions




THULE
BRING IT!
GUARANTEE
THULE.COM

CITY CRASH
Complies with ISO norm

TÜVRheinland CERTIFIED
www.tuv.com
ID 1000000000

GS geprüfte Sicherheit

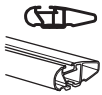
Thule WingBar

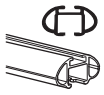
Thule AeroBar


Thule ProBar

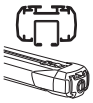
Thule SlideBar

896000

C.20161011
506-7225-01

**Bring your life**
thule.com

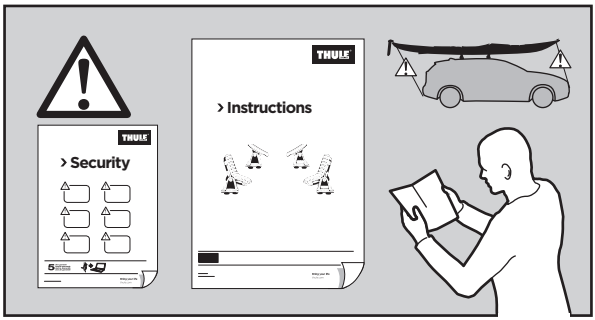
THULE
› Security
THULE
› Instructions

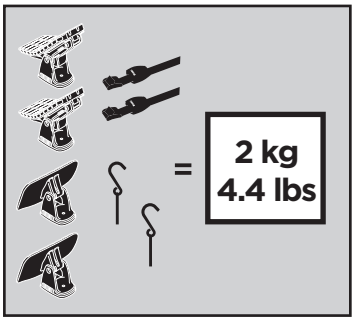
=
2 kg
4.4 lbs

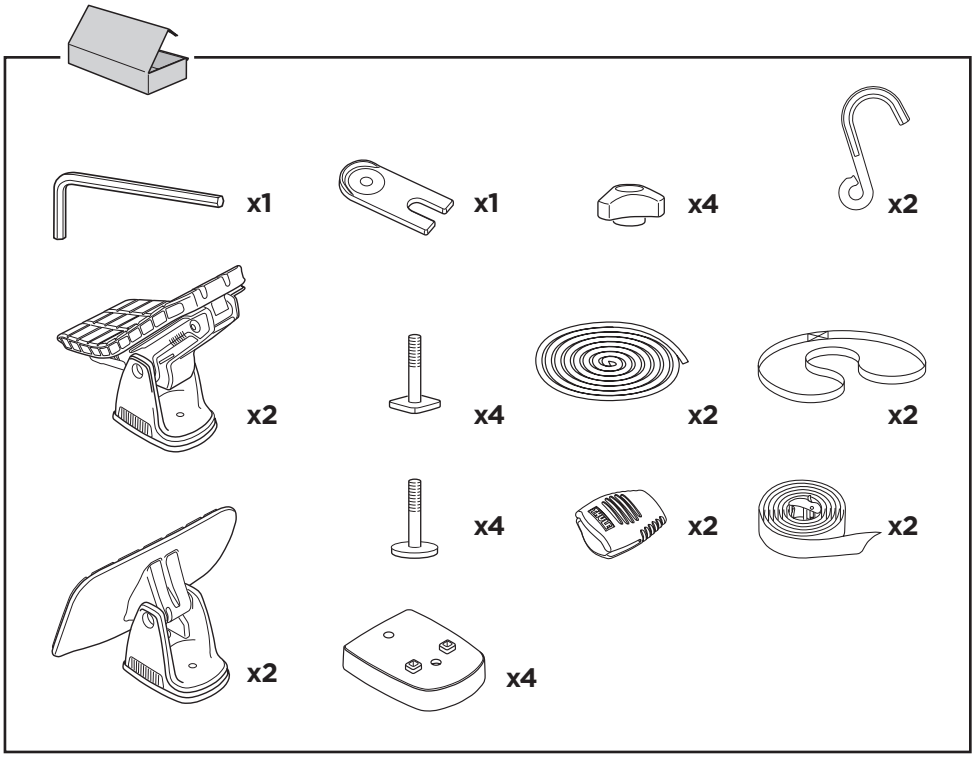
x1
x1
x4
x2
x2
x4
x2
x2
x4
x2
x2
x2
x4

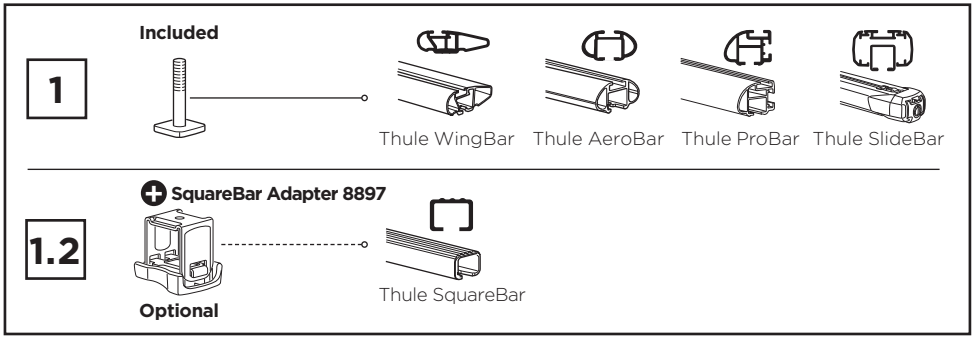
1
Included
Thule WingBar
Thule AeroBar
Thule ProBar
Thule SlideBar
1.2
SquareBar Adapter 8897
Optional
Thule SquareBar

**1**

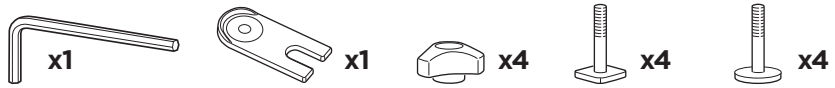


**A**

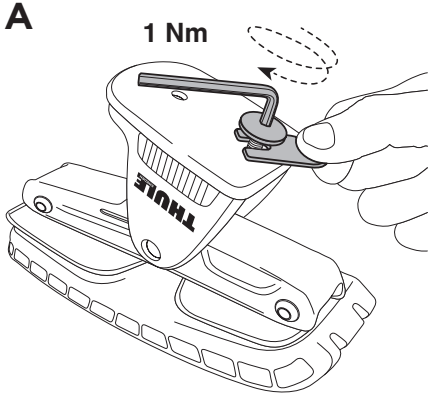


**B**

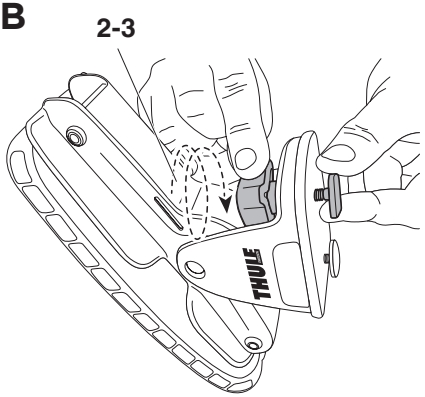


**C**

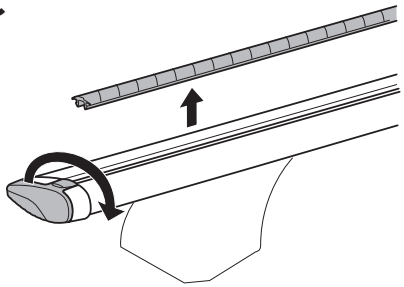

**D**

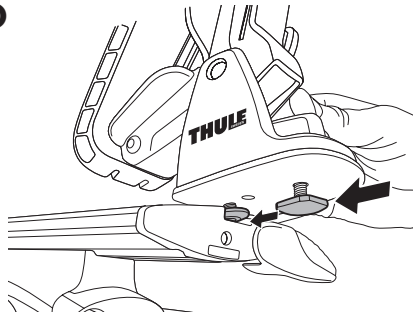


**E**

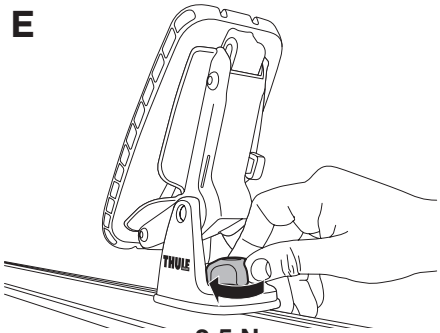


**F**

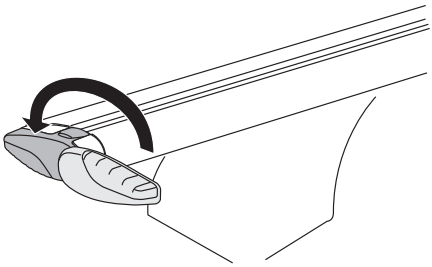

## 1.2













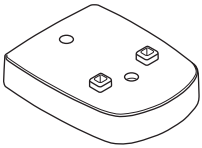


Optional

**SquareBar Adapter 8897**

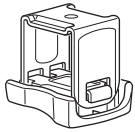


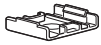


## A

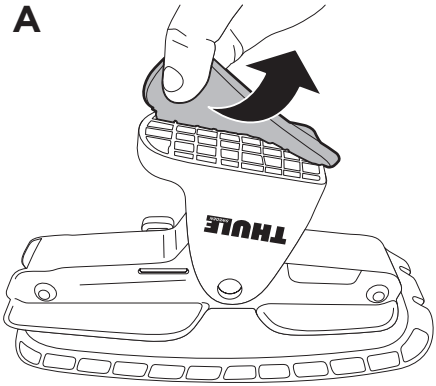


## B

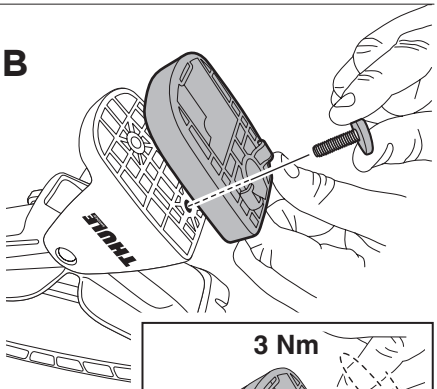


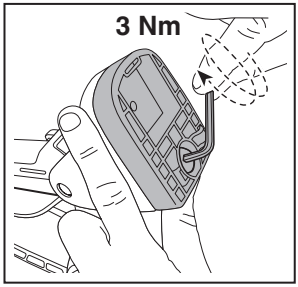


## C

**SquareBar Adapter 8897**

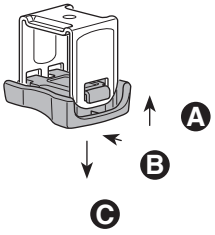


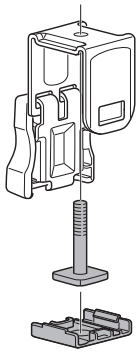

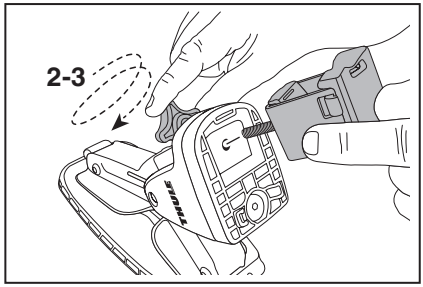

**1.2**

**D**

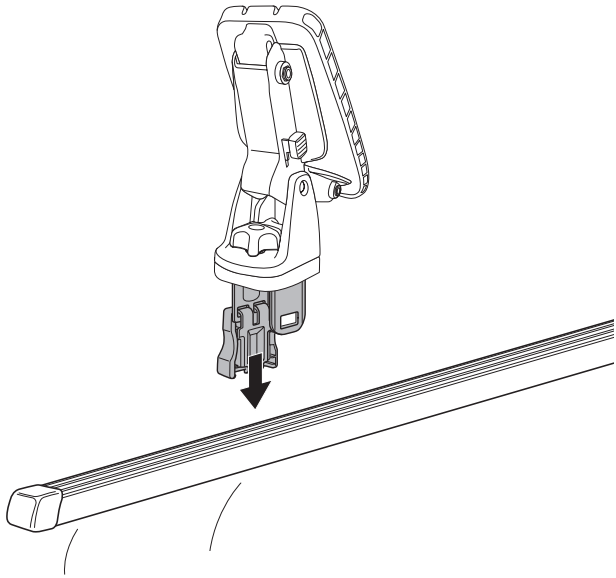

**E**

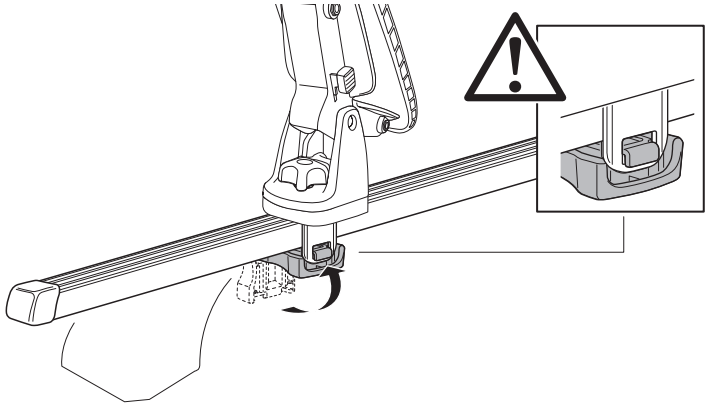

**F**

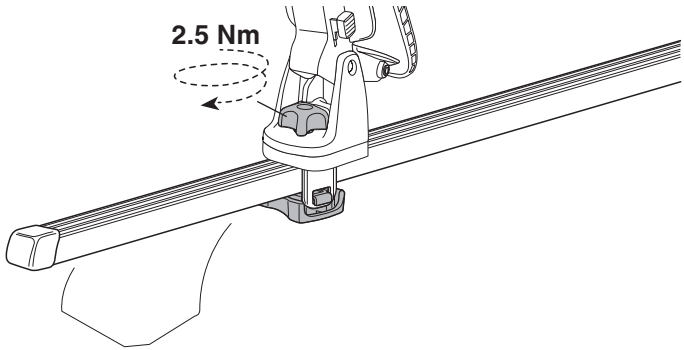

**2**

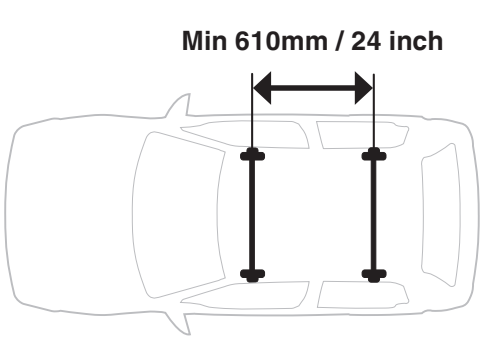


**A**

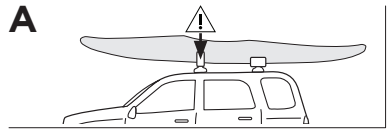

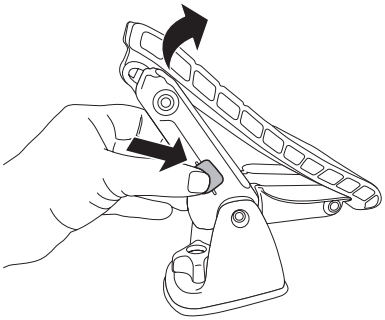

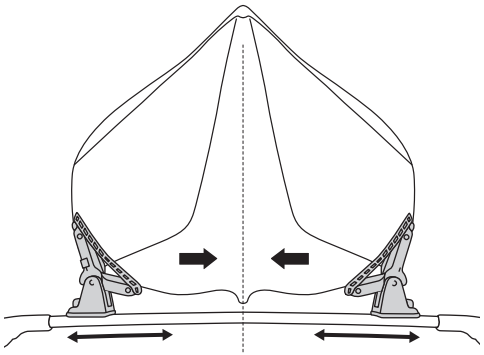

**B**

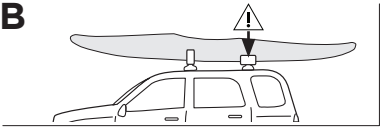

**3**

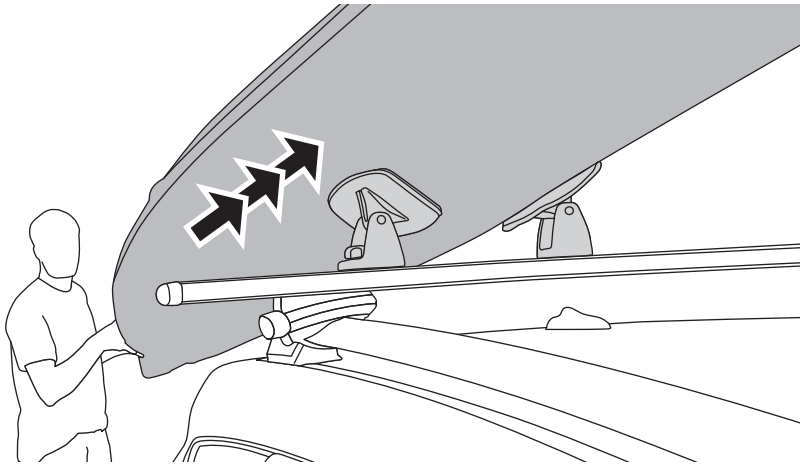

**4**

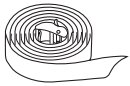

x2



x2

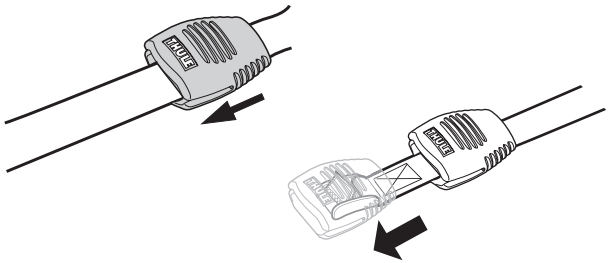

**5**

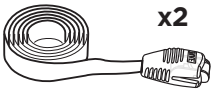

x2

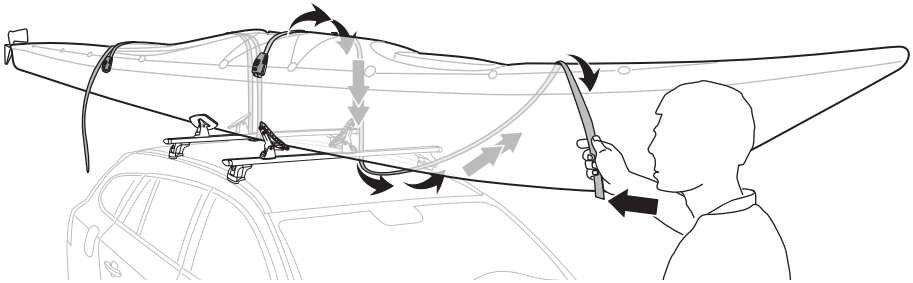

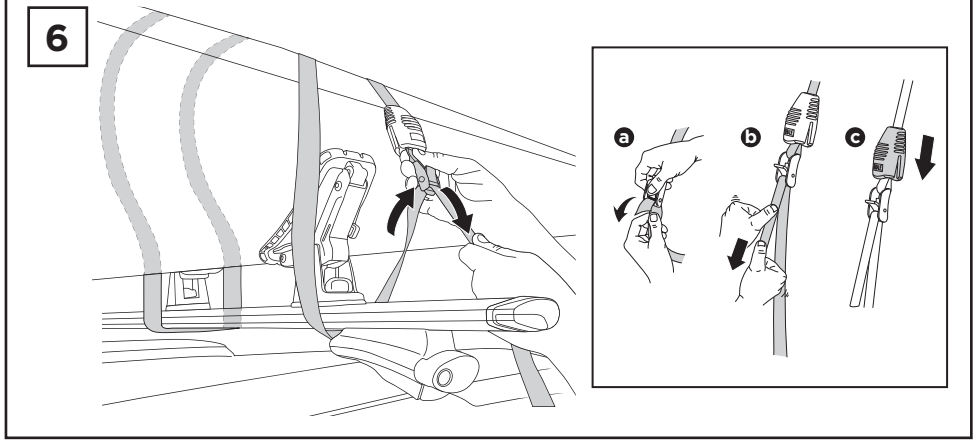
6
a
b
c

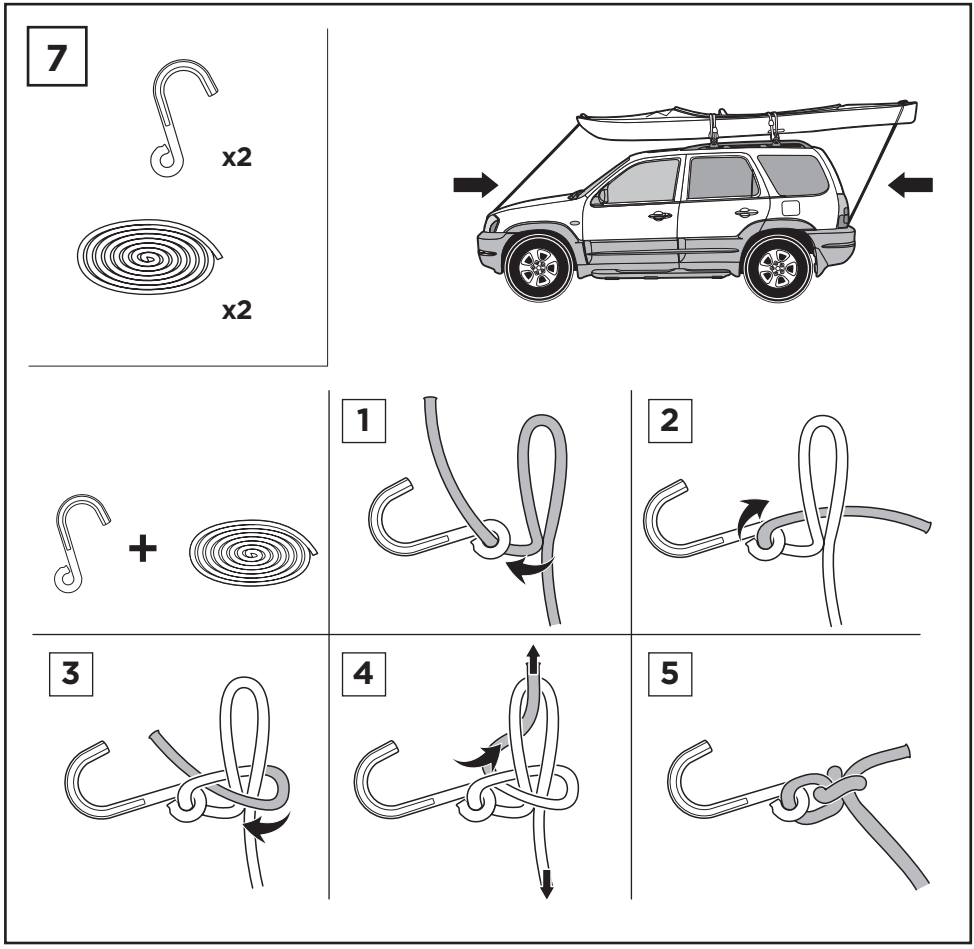
7
x2
x2
1
2
3
4
5

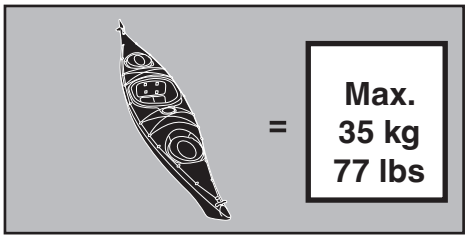


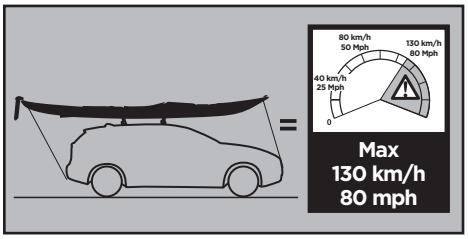


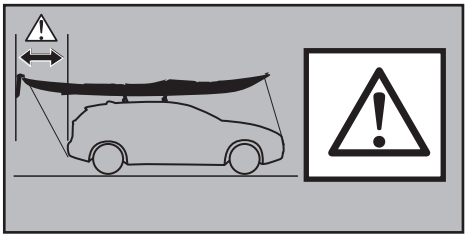

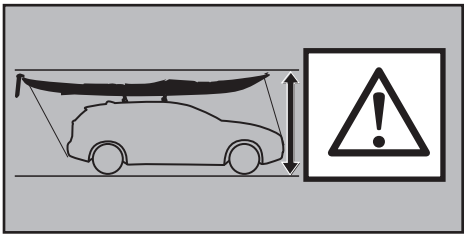

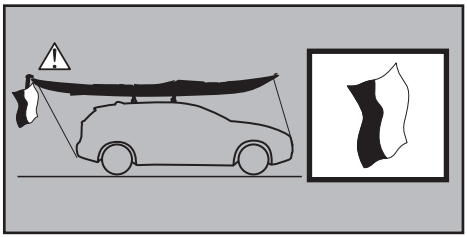

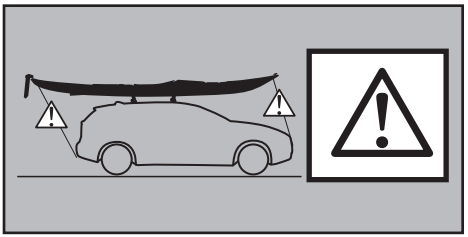

| | | | |
|---|---|---|---|
| **GB** | Accessories | **RU** | Аксессуары |
| **D** | Zubehör | **CZ** | Doplňky |
| **F** | Accessoires | **SK** | Príslušenstvo |
| **NL** | Accessoires | **SLO** | Dodatki |
| **I** | Accessori | **HR** | Dodaci |
| **E** | Accesorios | **HU** | Tartozékok |
| **PT** | Acessórios | **GR** | Παρελκόμενα |
| **S** | Tillbehör | **TR** | Aksesuarlar |
| **FIN** | Lisävarusteet | **中文** | 附件 |
| **EST** | Lisavarustus | **日本語** | 付属品 |
| **LAT** | Piederumi | **한국어** | 액세서리 |
| **LIT** | Priedai | **ไทย** | อุปกรณ์เสริม |
| **PL** | Akcesoria | | |

**8897**
**SquareBar Adapter**



**841**




**855**




WW
NA
Thule Sweden AB, Box 69, 330 33 Hillerstorp, SWEDEN
Thule Inc., 42 Silvermine Road, Seymour, Connecticut 06483, USA
info@thule.com
Phone: 800-238-2388
www.thule.com

» PART OF THULE GROUP
© Thule Group 2016. All rights reserved.