Thule Transport Wheel 9173

› Instructions

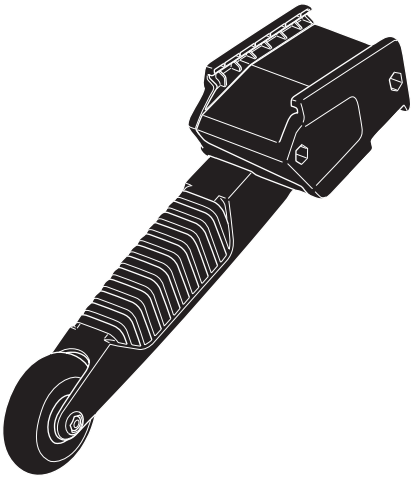

THULE
BRING IT! GUARANTEE
THULE.COM

917300

C.20150930
501-8085-01

Bring your life
thule.com

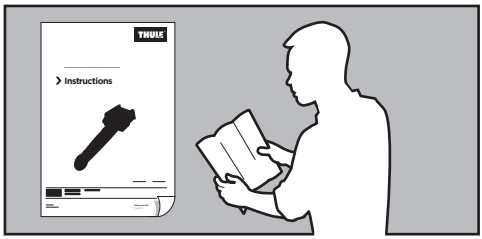
THULE
› Instructions

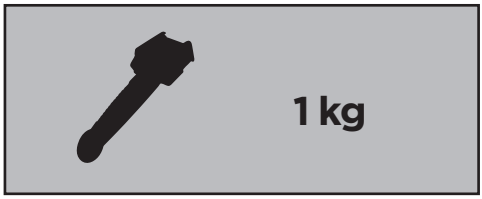
1 kg

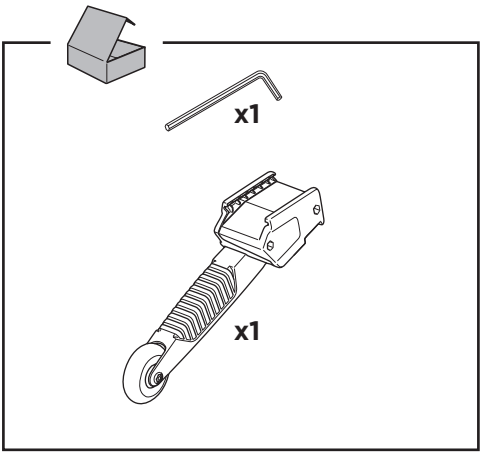
x1
x1

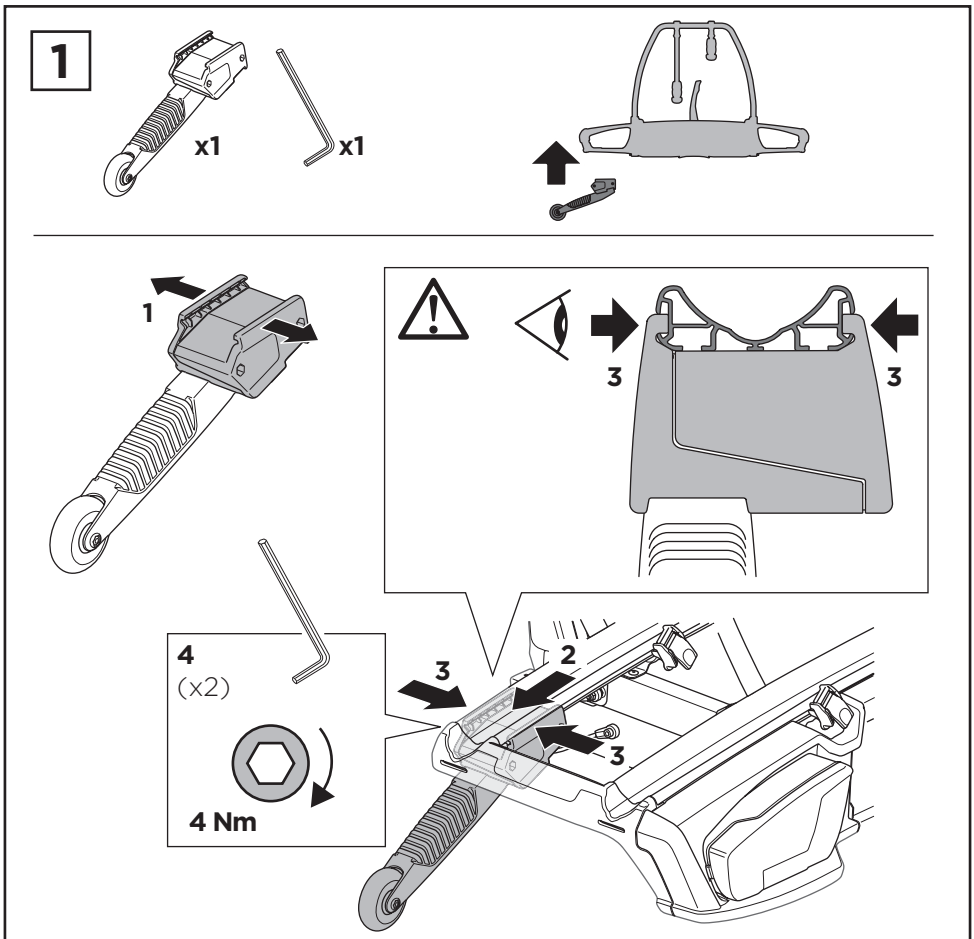
1
x1
x1
1
3
3
4
(x2)
4 Nm
3
2
3

2

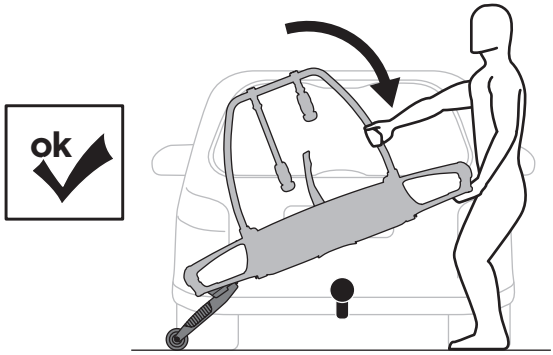

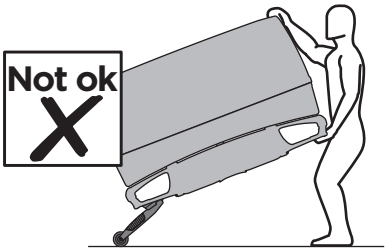

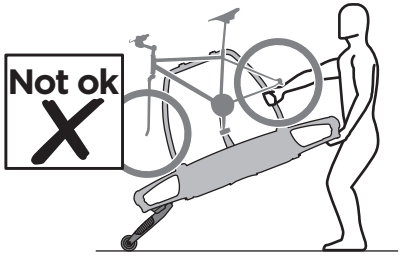

i

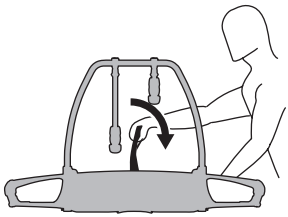

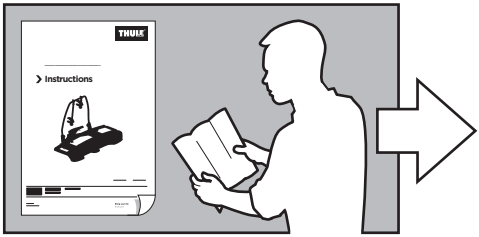

3

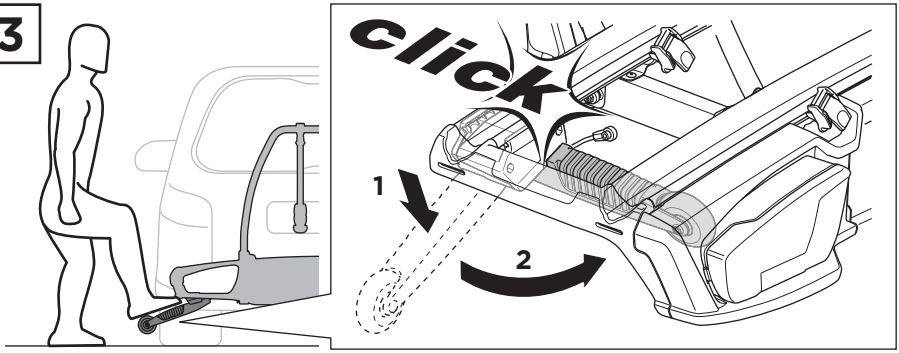

i

A

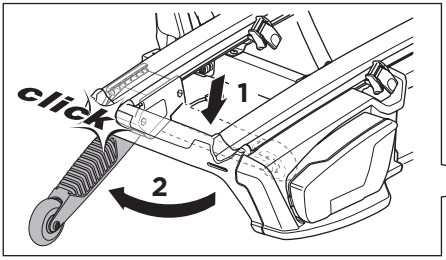

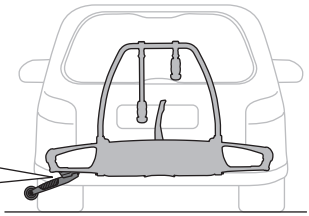

B



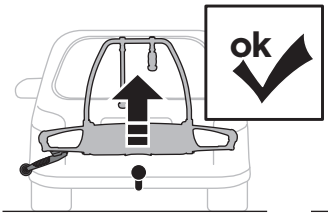

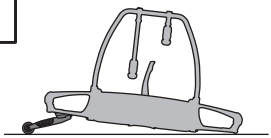

C

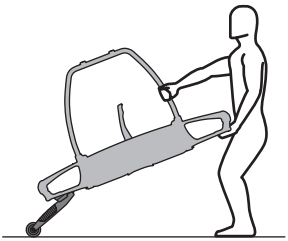

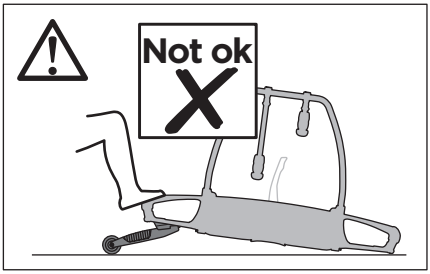

!

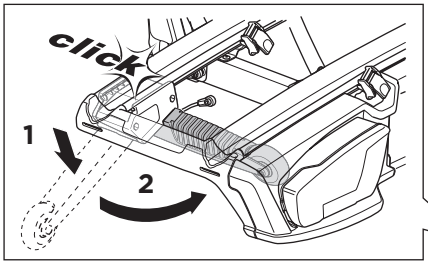

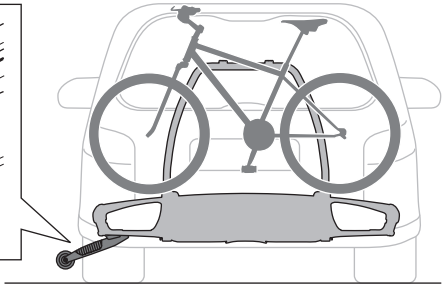

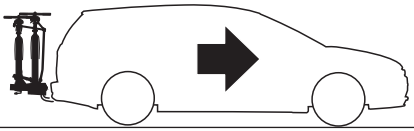

Thule Sweden AB, Box 69, 330 33 Hillerstorp, SWEDEN
info@thule.com
www.thule.com
PART OF THULE GROUP
© Thule Group 2015. All rights reserved.