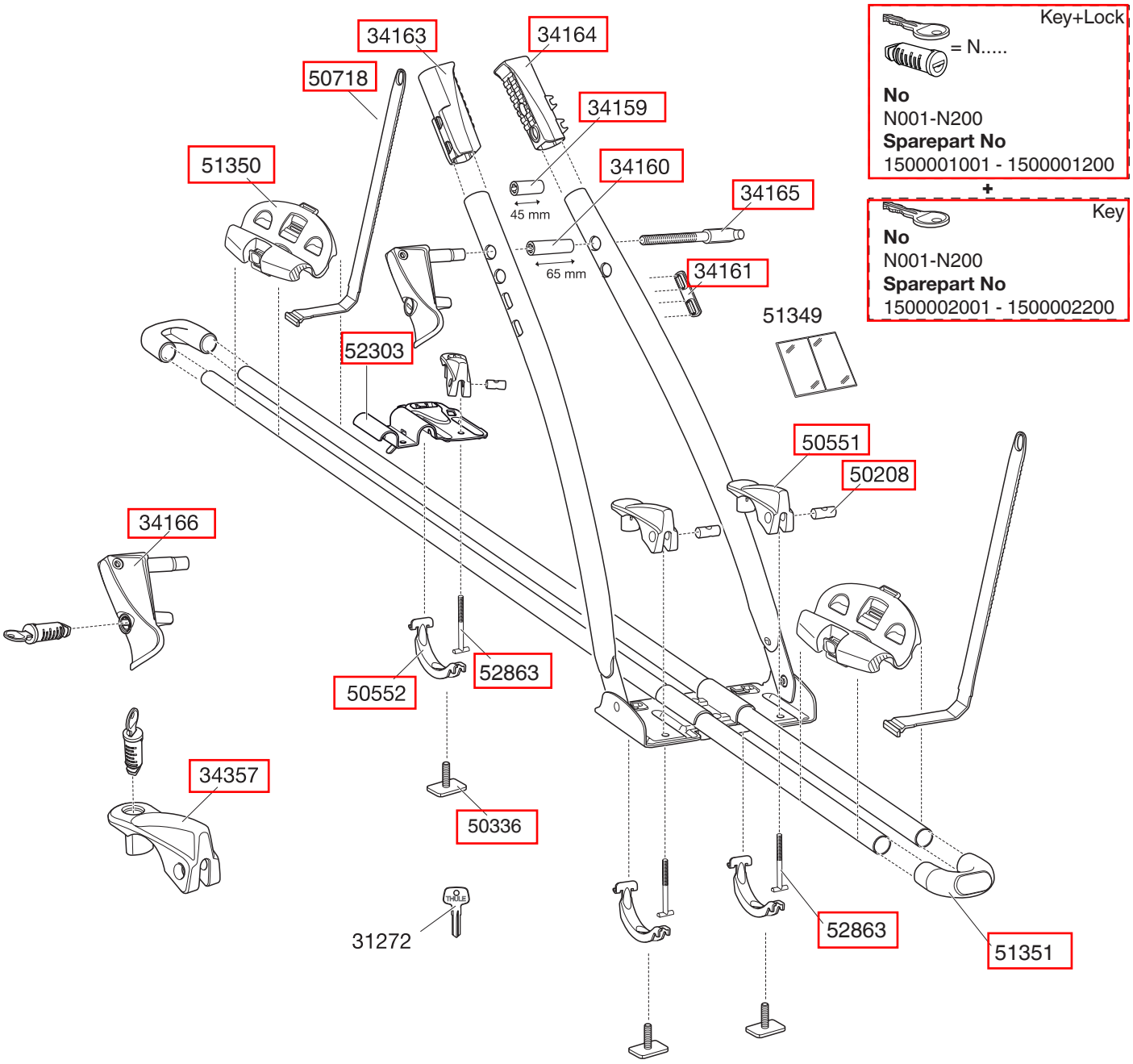

52861
Clamp Repair Kit

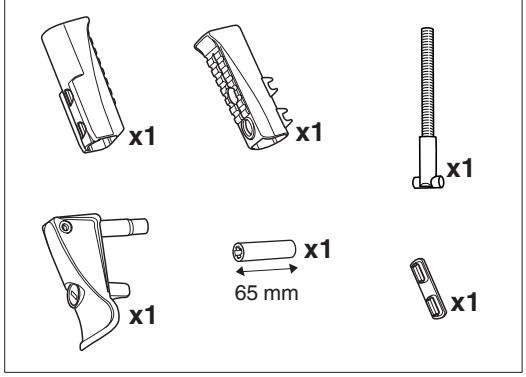

52862
SquareBar Adapter Repair Kit

