› Instructions

Thule Caprock rail mount 181005

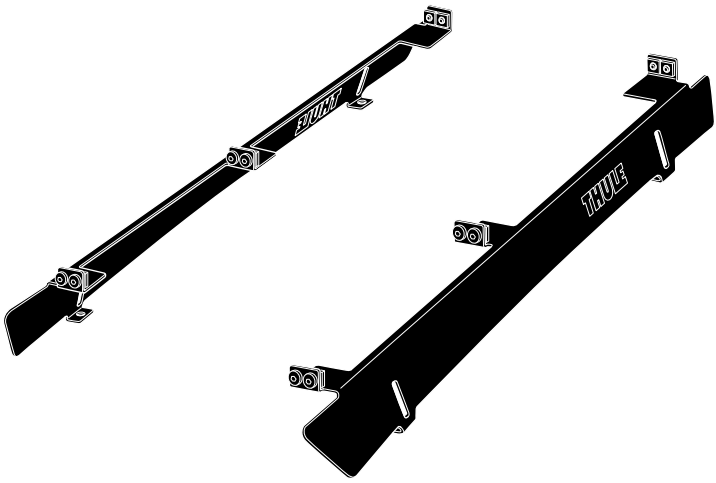

THULE GUARANTEE
THULE.COM

5564363001

Bring your life
thule.com

VOLKSWAGEN Amarok Double Cab, 4-dr Pickup, 10-22

5.8 kg
12.8 lbs

Instructions
Thule Caprock rail mount



Instructions
Thule Caprock



Safety

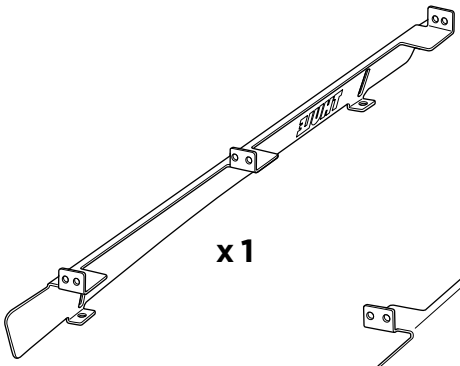

x 1

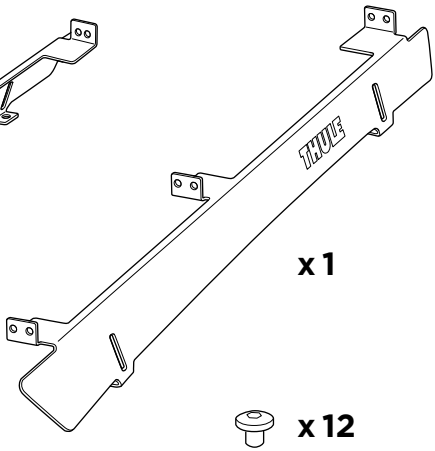

x 1



x 4



x 4

x 12



x 12

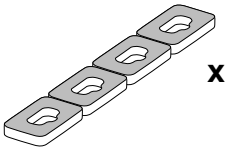

x 1

5 mm
¼"



x 1





Max
100 Kg /220 lbs

1

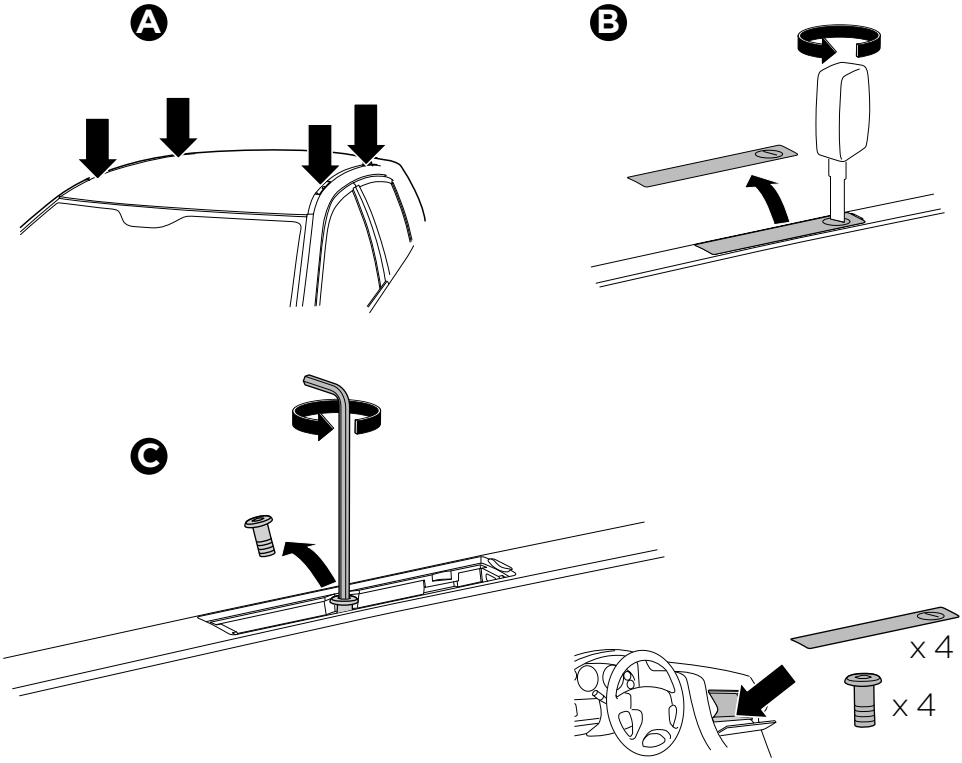

2

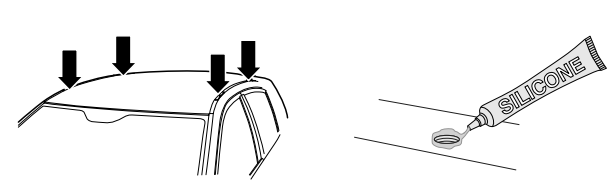

3

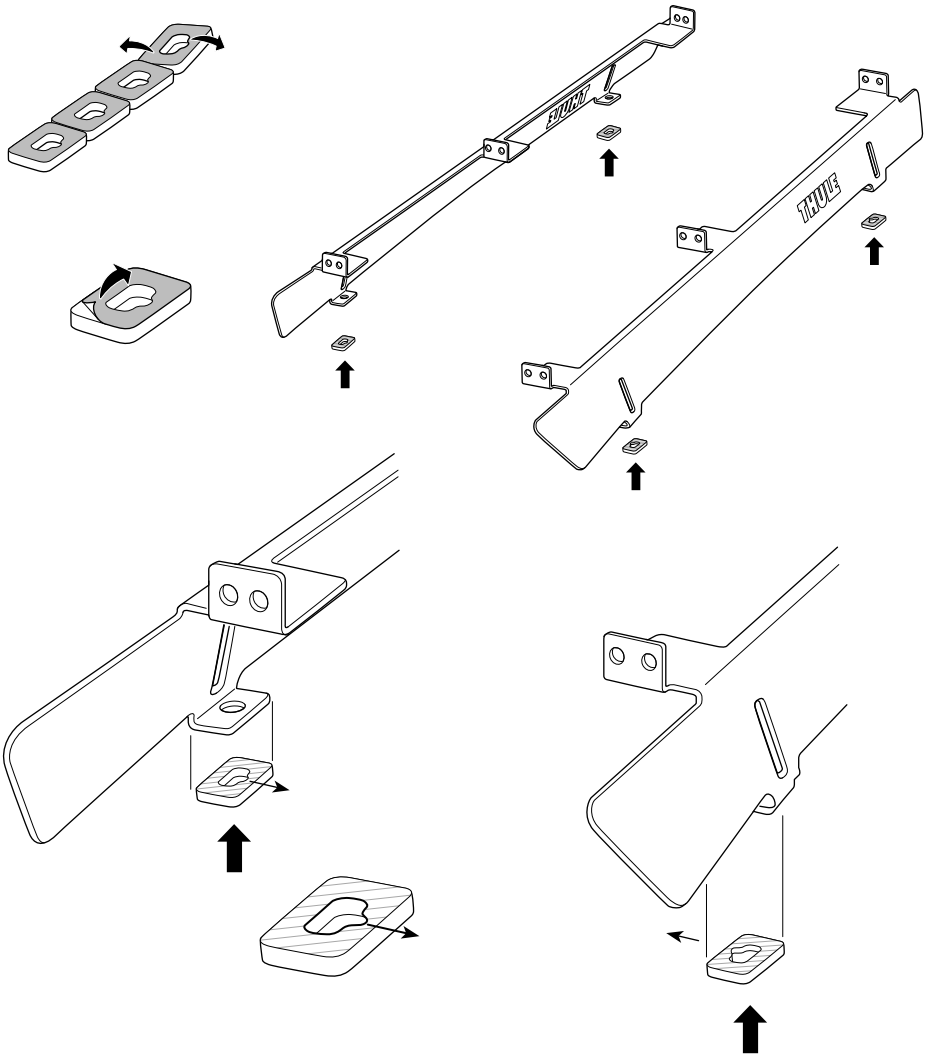

4

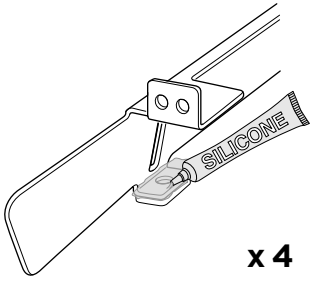

x 4



5



x 4



x 4

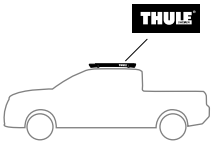

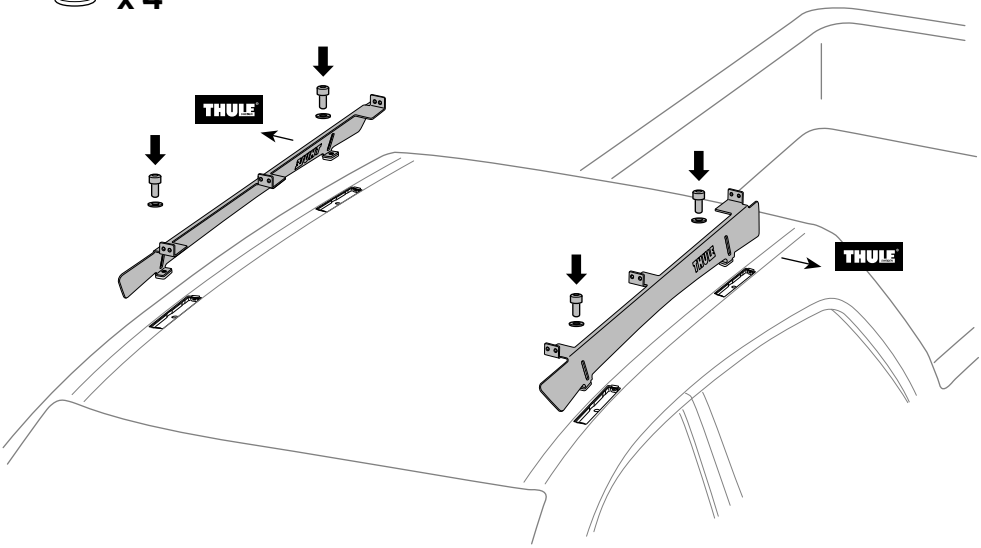

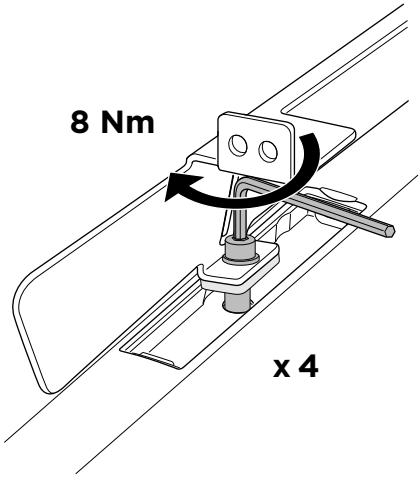

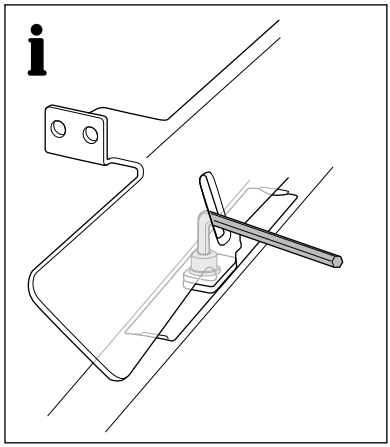

6

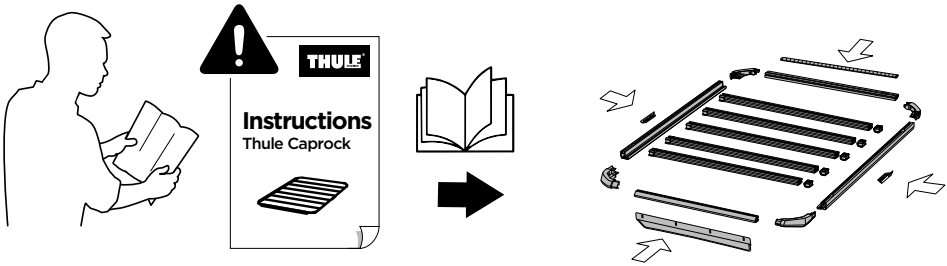

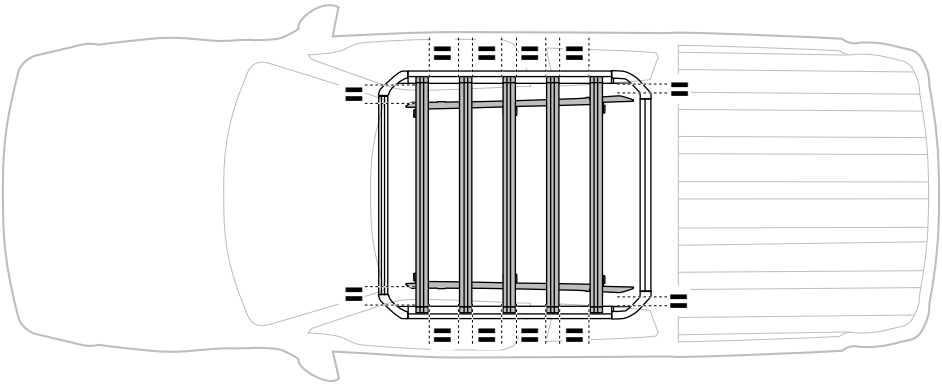

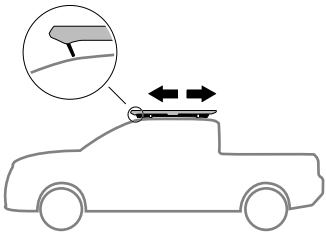

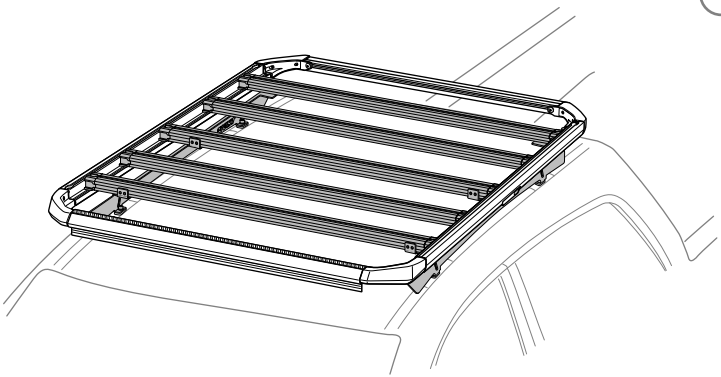

7

x 12

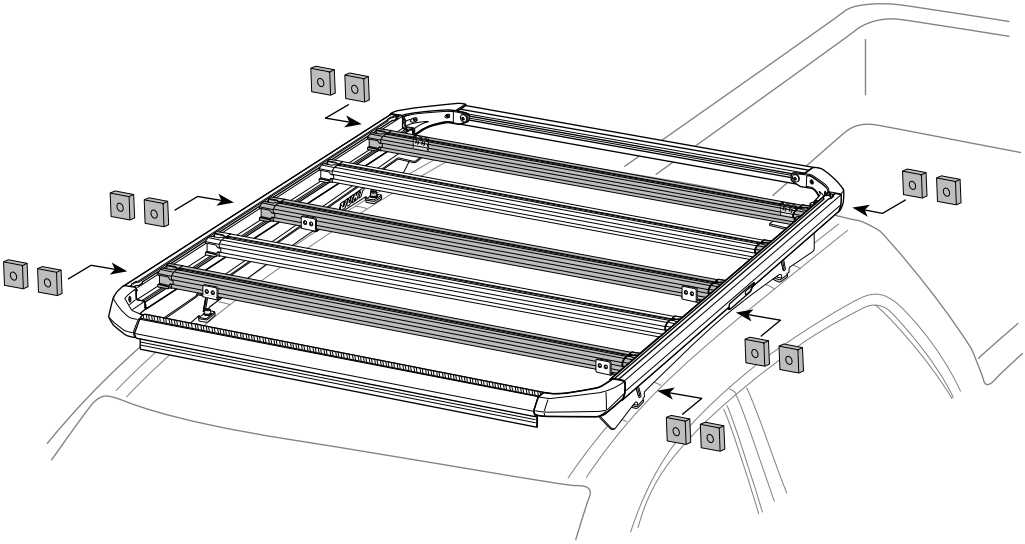

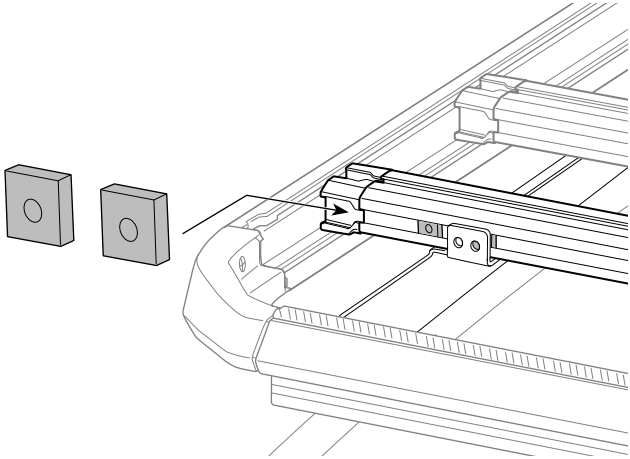

8

x 12

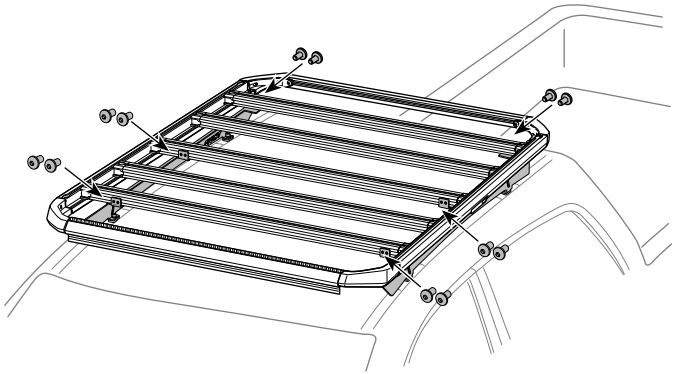

15 Nm

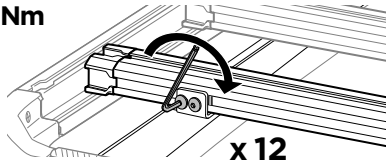

x 12

9



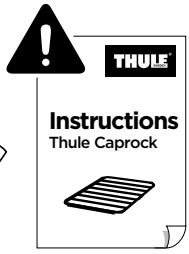

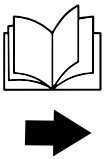

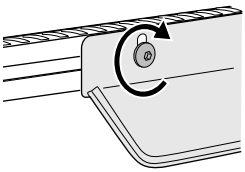

15 Nm

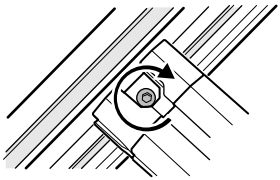

15 Nm

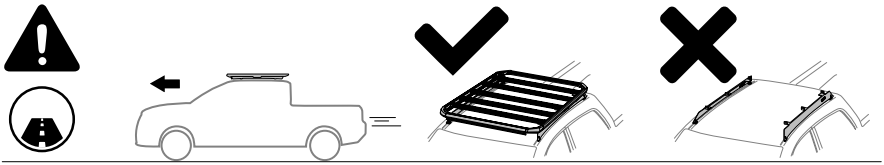

Thule Sweden AB. Borggatan 5, 335 73 Hillerstorp, SWEDEN
info@thule.com | *www.thule.com*

Thule Inc. 42 Silvermine Road, Seymour, CT 06483
Thule Canada Inc. 710 Bernard, Granby QC J2J 0H6
North American Consumer Service:
Toll Free 800-238-2388, Fax 450-777-3615
www.thule.com

Register online at:
www.thule.com/register

© Thule Group. All rights reserved.
5564363001 | 2024-12-20 #00

» PART OF THULE GROUP