Thule T-track adapter 889-3 for Thule FreeRide 530/532 and Thule Outride 561

› Instructions

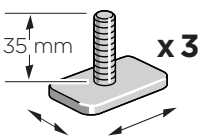

24 x 30 mm

889301
20141020
501-8050-01

Bring your life
thule.com

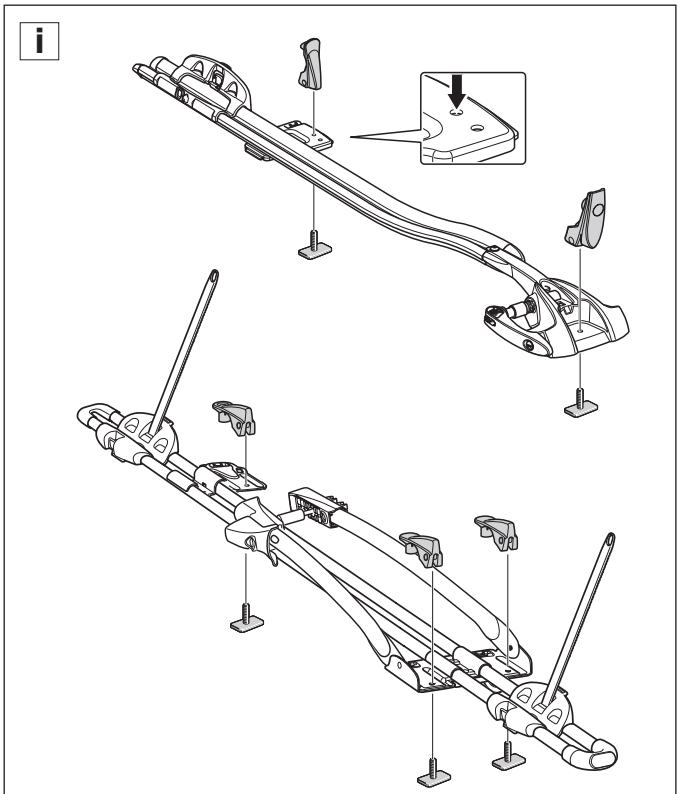

Thule Sweden AB, Box 69, 330 33 Hillerstorp, SWEDEN

info@thule.com

www.thule.com

501-8050-01

» PART OF THULE GROUP

© Thule Group 2014. All rights reserved.