1 Kit 5023

VOLKSWAGEN Golf Sportsvan, 5-dr MPV, 14-

ISO 11154-E

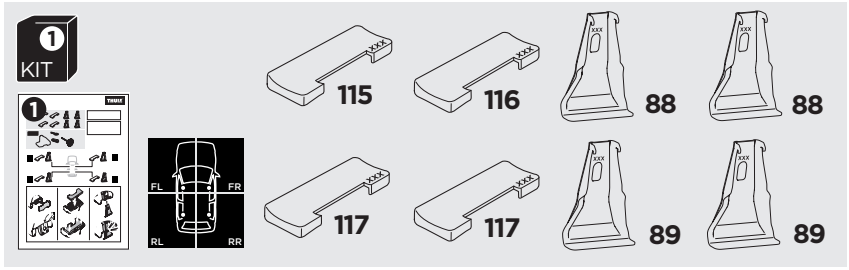

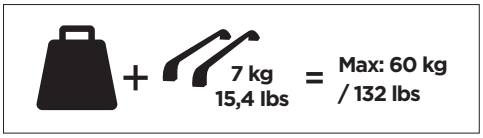

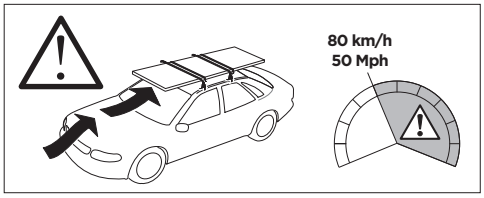

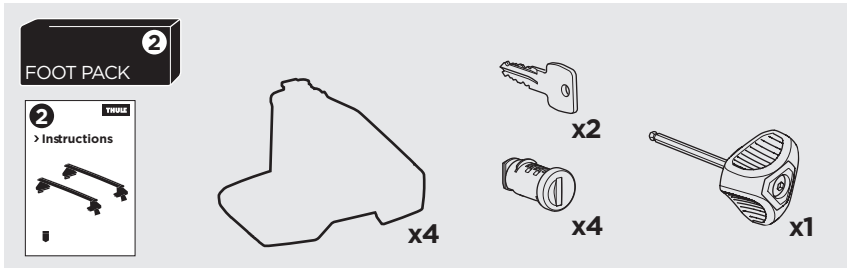

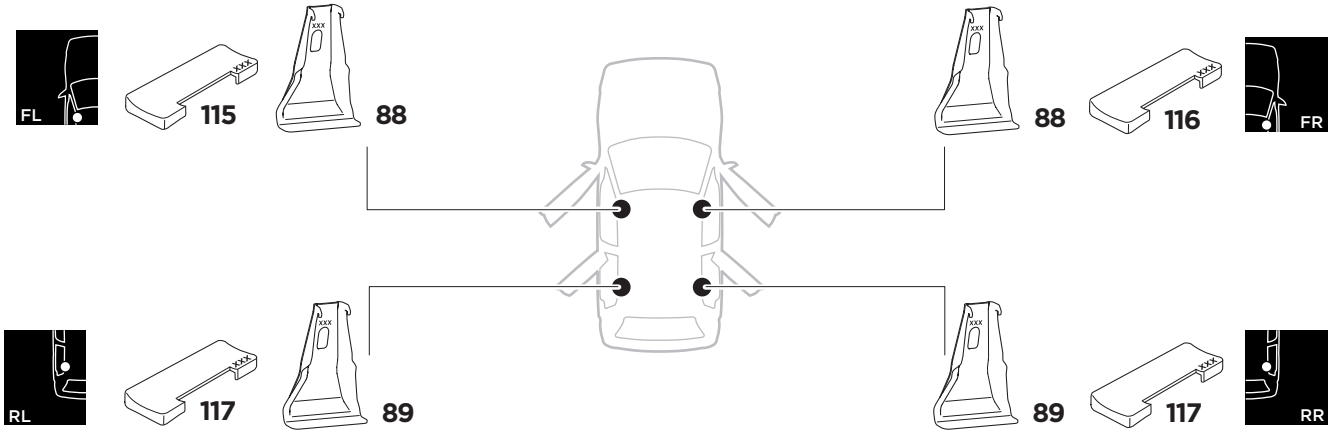

1



x4

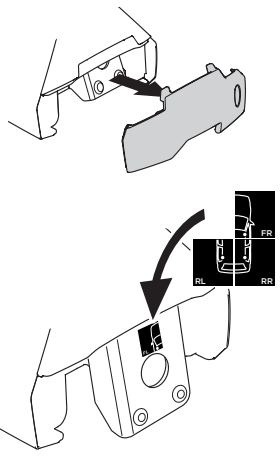

2

x4

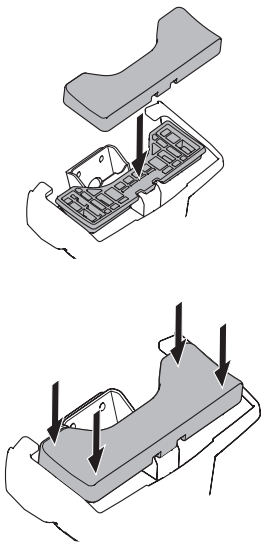

3

x4

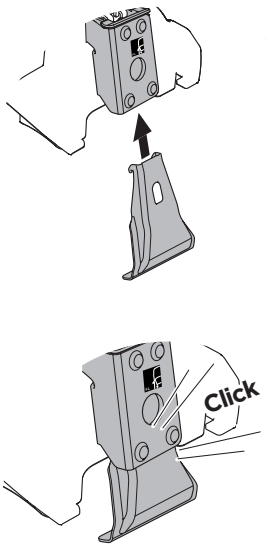



2

521-5023-01

Bring your life
thule.com

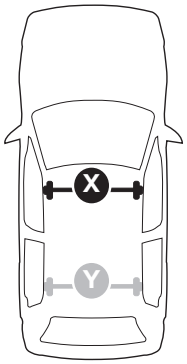

THULE WingBar Evo / THULE WingBar Edge / THULE WingBar / THULE SquareBar	Evo X (scale)	Edge X (scale)
VOLKSWAGEN Golf Sportsvan, 5-dr MPV, 14-	**43,5**	**J**

THULE ProBar / THULE SlideBar	X (mm/inch)
VOLKSWAGEN Golf Sportsvan, 5-dr MPV, 14-	**1086 mm / 42 3/4“**

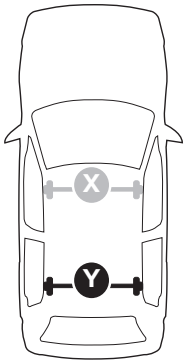

THULE WingBar Evo / THULE WingBar Edge / THULE WingBar / THULE SquareBar	Evo Y (scale)	Edge Y (scale)
VOLKSWAGEN Golf Sportsvan, 5-dr MPV, 14-	**36,5**	**F**

THULE ProBar / THULE SlideBar	Y (mm/inch)
VOLKSWAGEN Golf Sportsvan, 5-dr MPV, 14-	**1016 mm / 40“**

	W (mm/inch)	Z (mm/inch)
VOLKSWAGEN Golf Sportsvan, 5-dr MPV, 14-	**790 mm / 31 1/8“**	**280 mm / 11“**

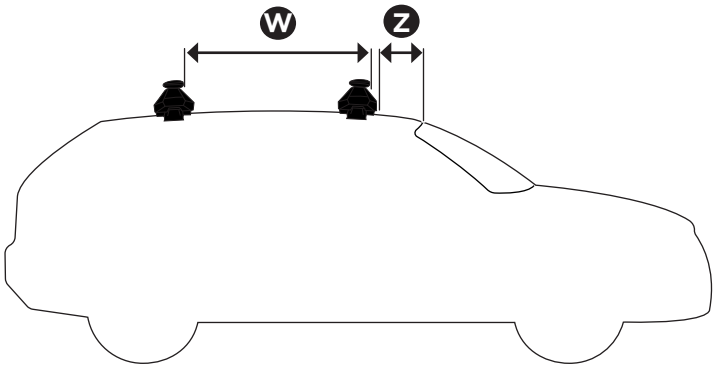

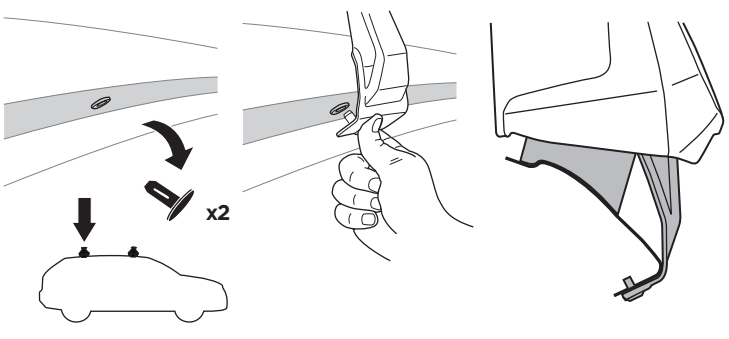

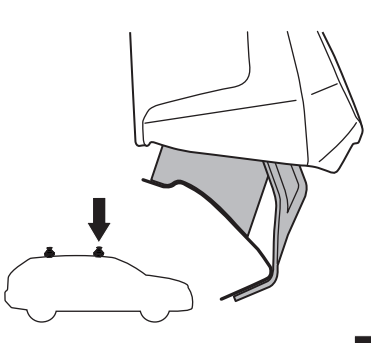





Thule Sweden AB, Borggatan 5
335 73 Hillerstorp, SWEDEN
» PART OF THULE GROUP

info@thule.com

www.thule.com

© Thule Group 2018. All rights reserved.