› Instructions

Thule Epos Bike Repair Holder
9783

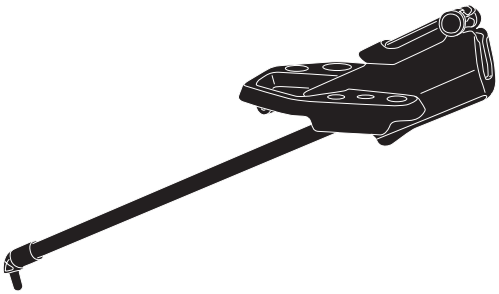

THULE GUARANTEE
THULE.COM

5562417001

Bring your life
thule.com

i

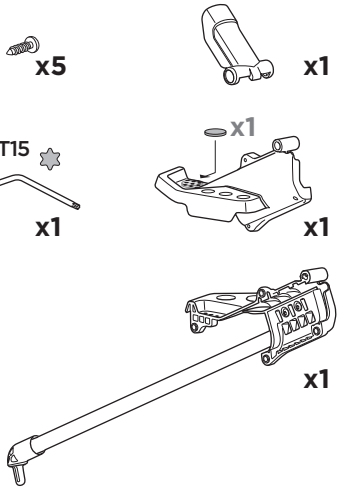

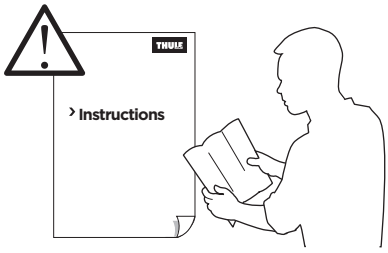



1

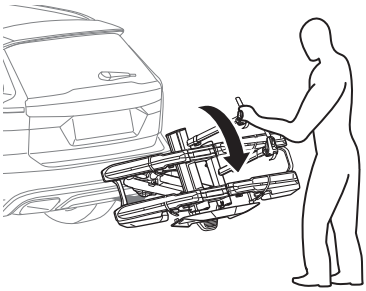

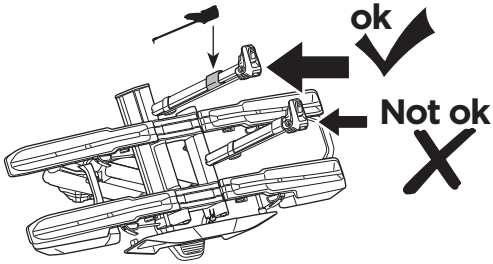

2

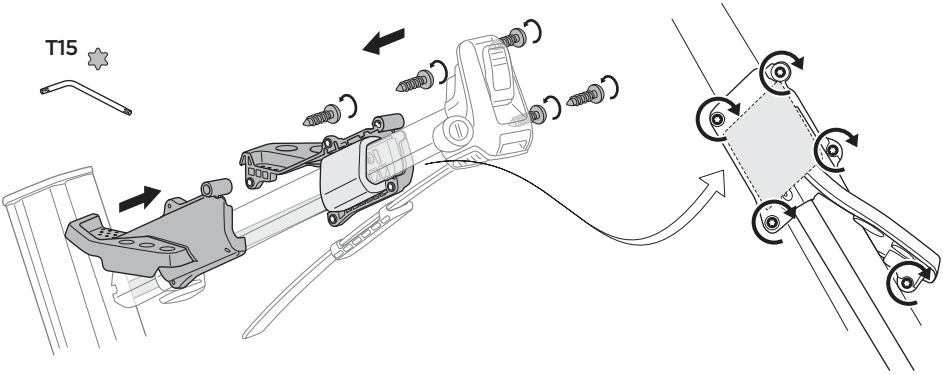

3

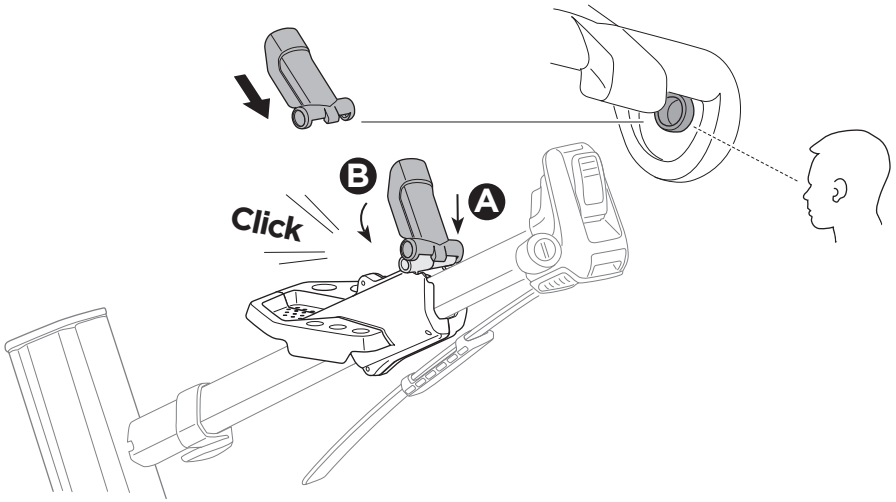

4

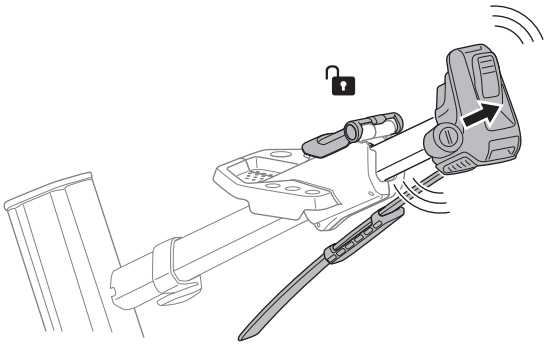

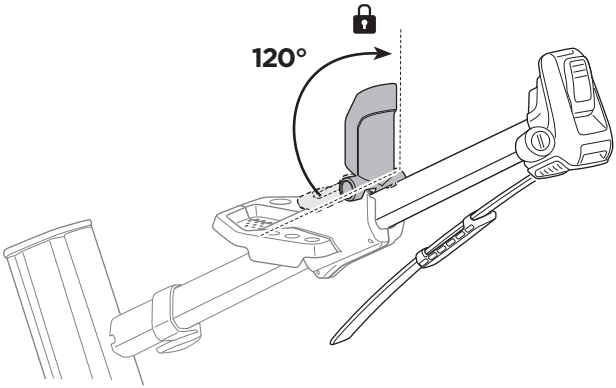

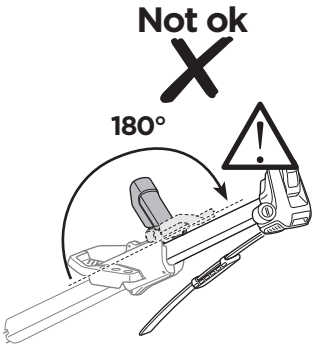

5

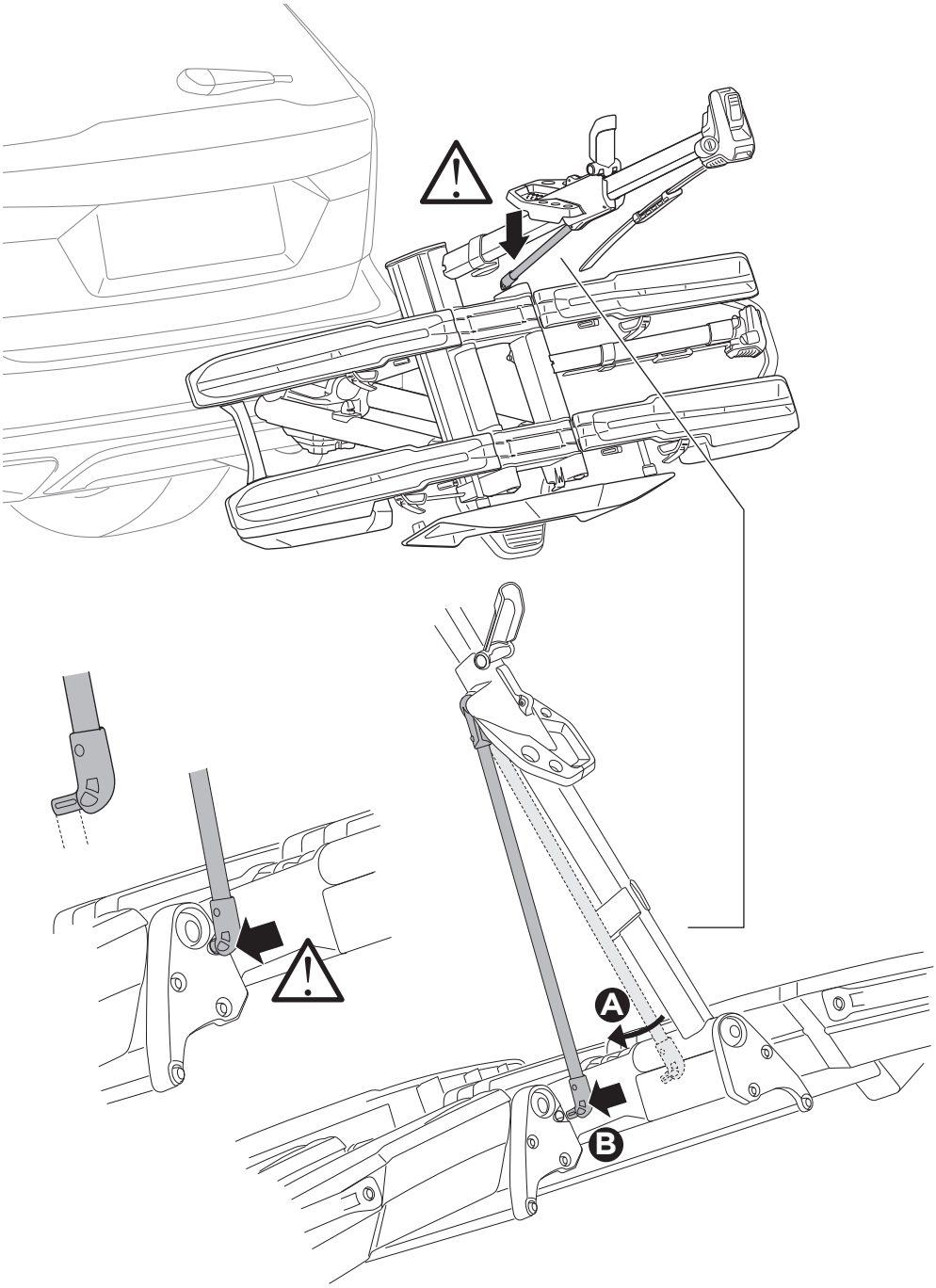

6

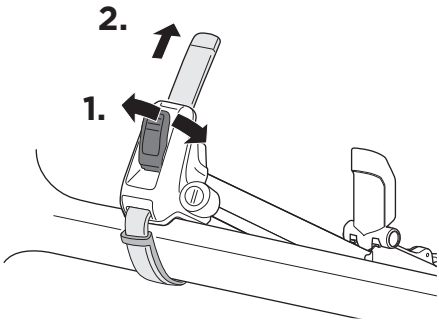



Max 30 kg

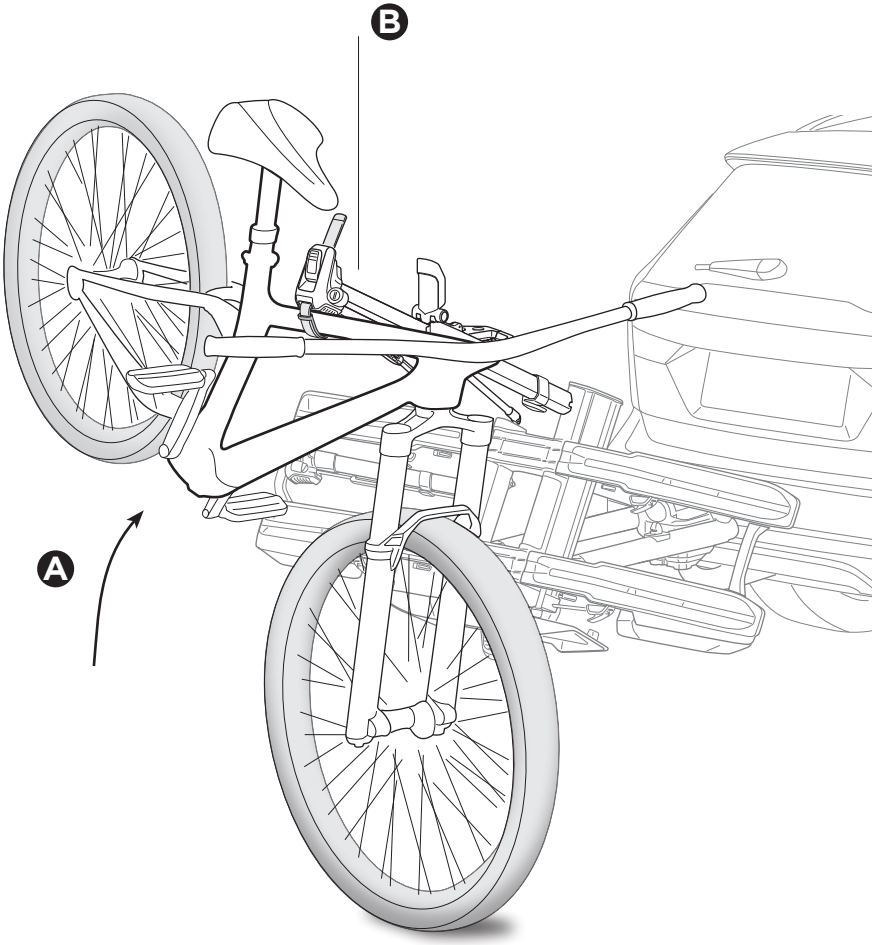

i



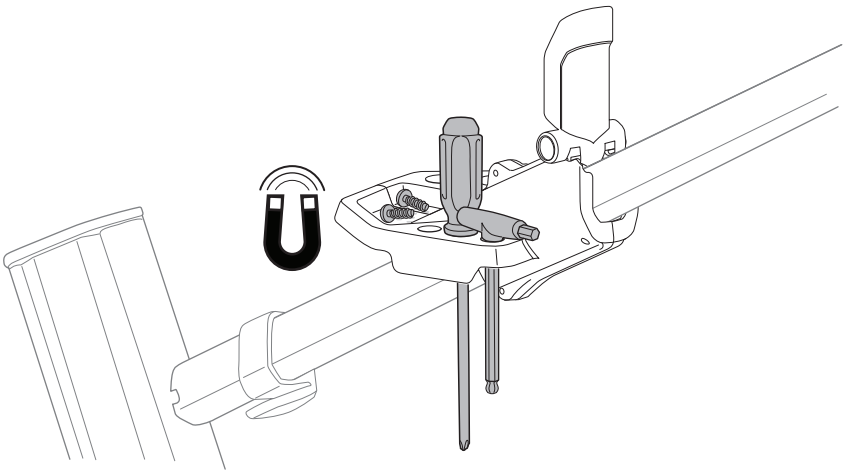

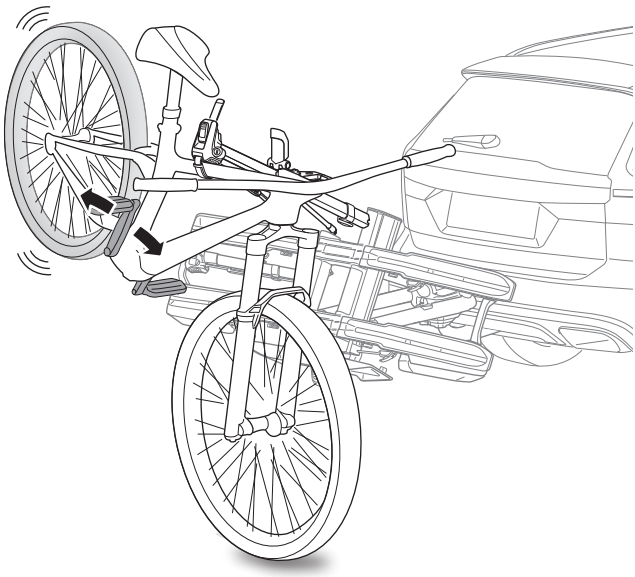

7

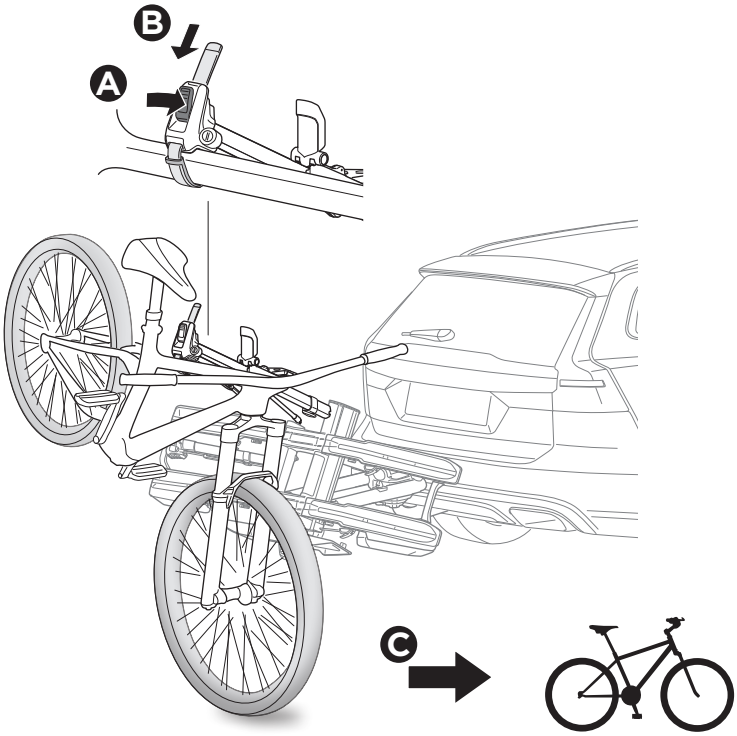

8

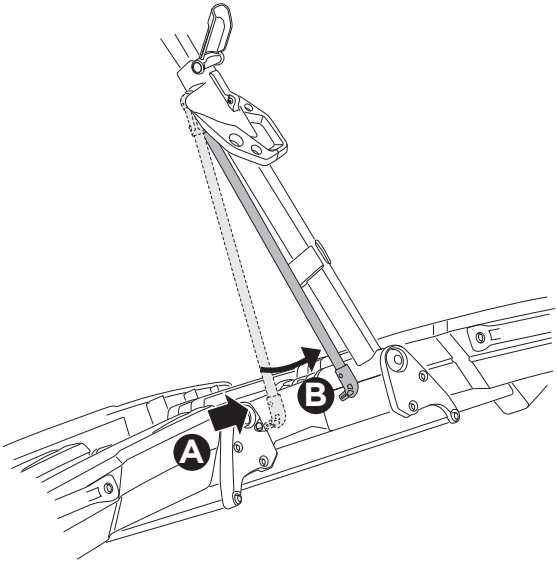

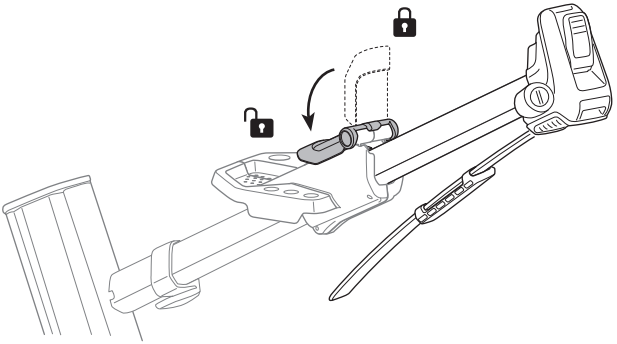

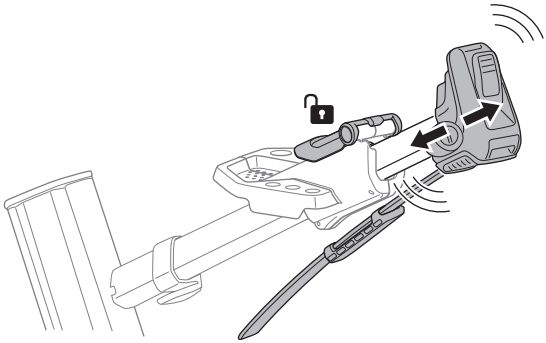

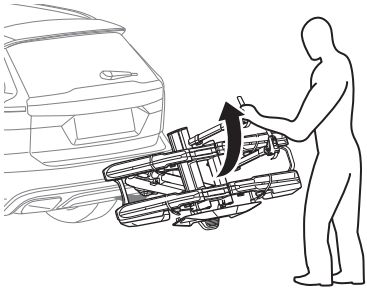

Thule Sweden AB
Borggatan 5
335 73 Hillerstorp, Sweden
info@thule.com
www.thule.com

© Thule Group March 2023. All rights reserved.