Thule Sport G2 3rd Rail Kit

› Instructions

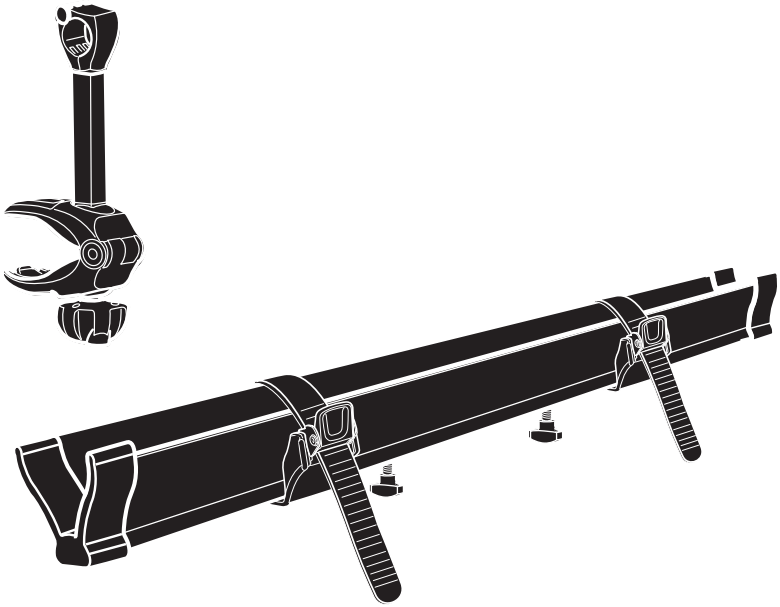

Prod no.: 306577
Document: SP903-01
Date: 08/10/2014

Bring your life
thule.com

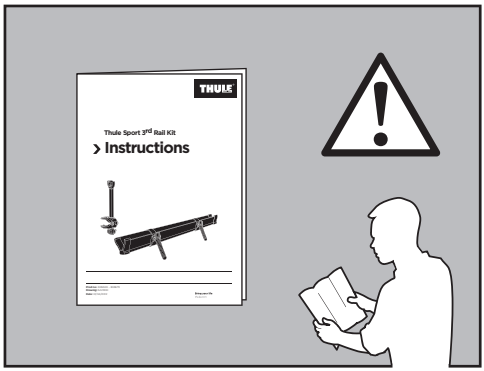
THULE
Thule Sport 3rd Rail Kit
› Instructions

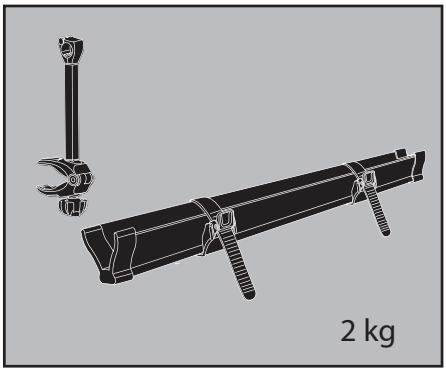
2 kg

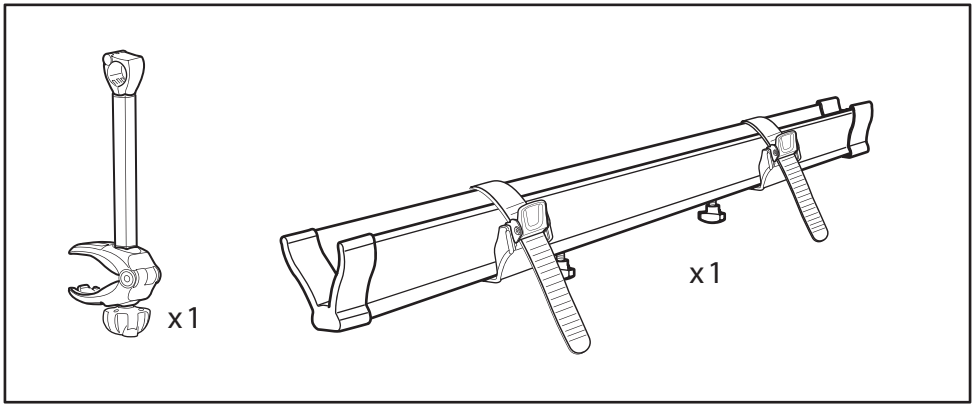
x1
x1

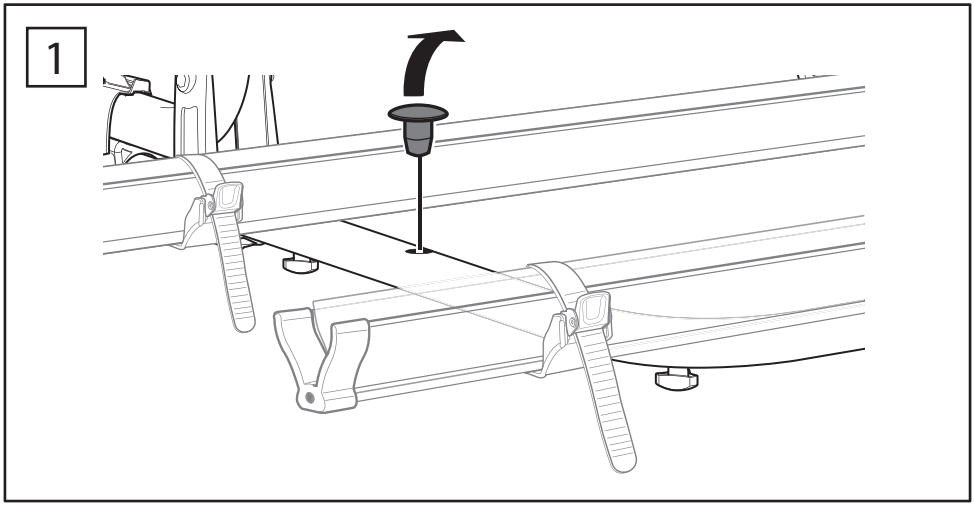
1

2

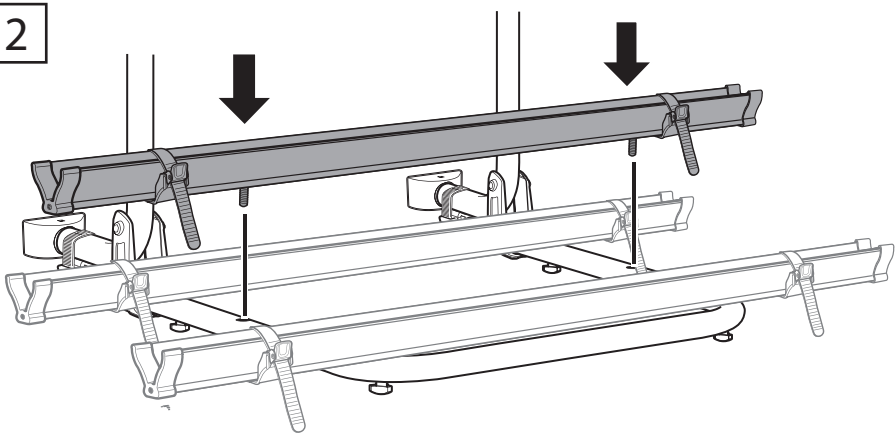

3

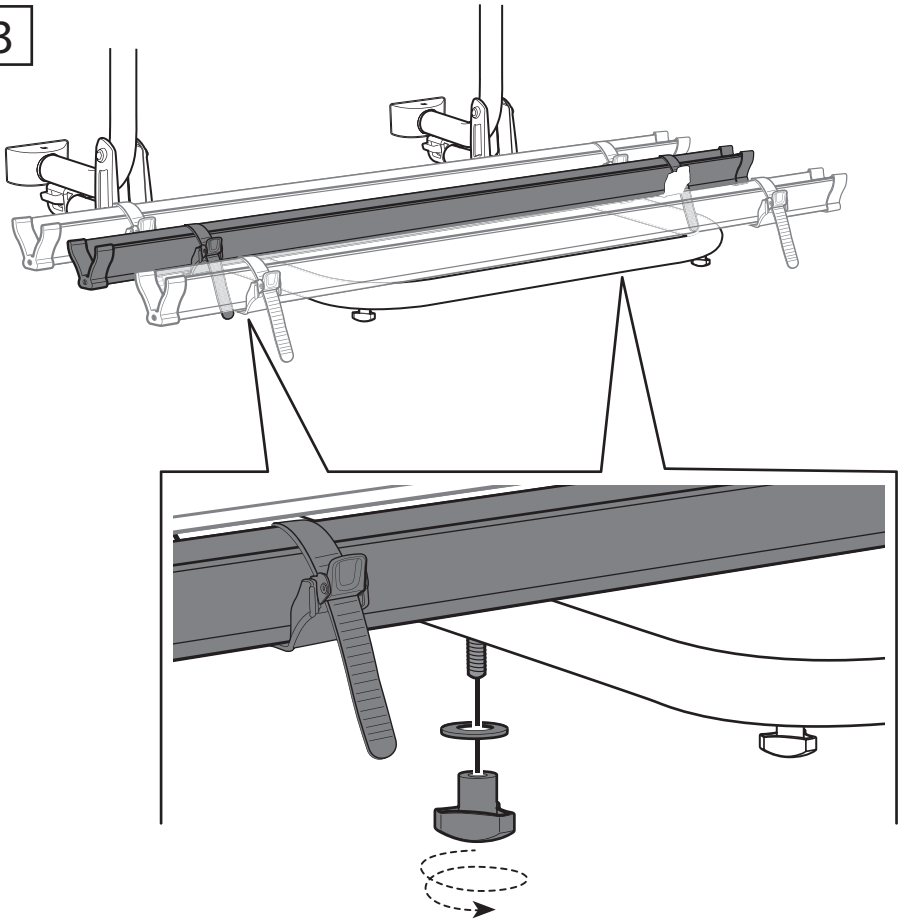

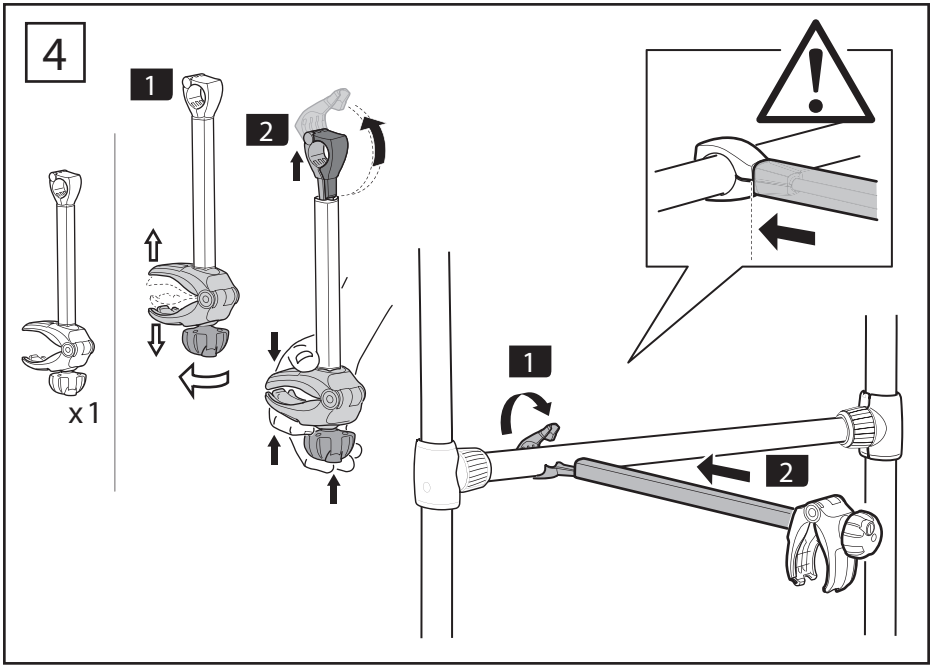

526000 **Abschließbare Knebelmutter**
Locking Knob



538000 **Kabelschloss**
Locking wire



Thule NV, Kortrijkstraat 343 – BE 8930 Menen, BELGIUM
infoRV@thule.com
www.thule.com

501-7736-01