› Instructions

Thule High-Grade Lock

9785, for Thule Epos and Thule EasyFold 3



THULE.COM

Bring your life
thule.com

i

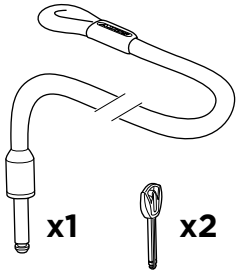

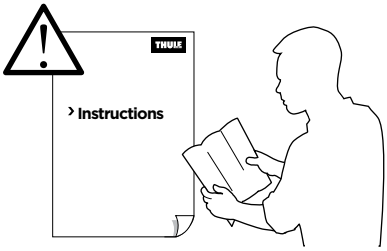

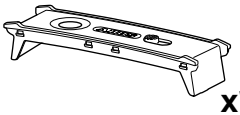

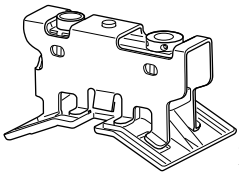

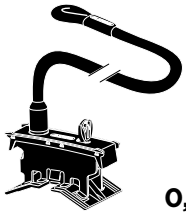

1

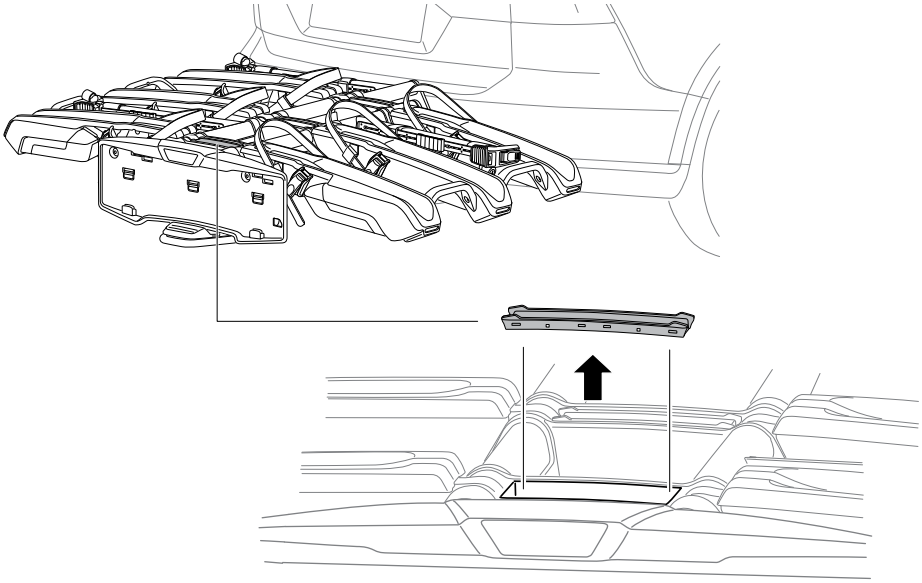

2

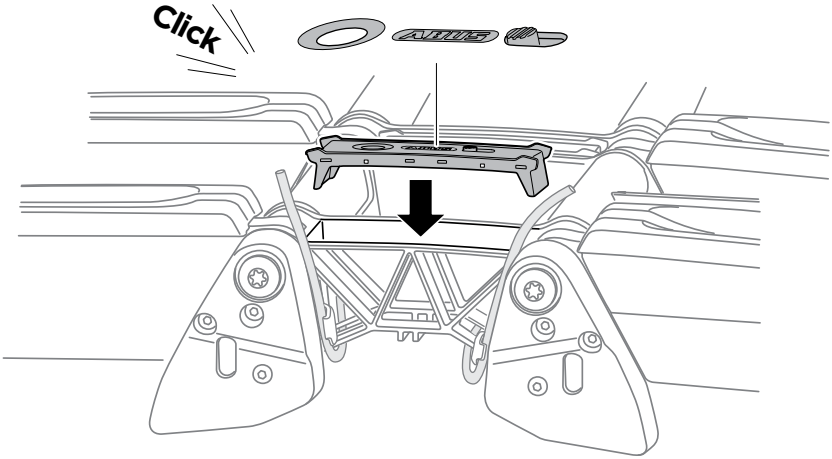

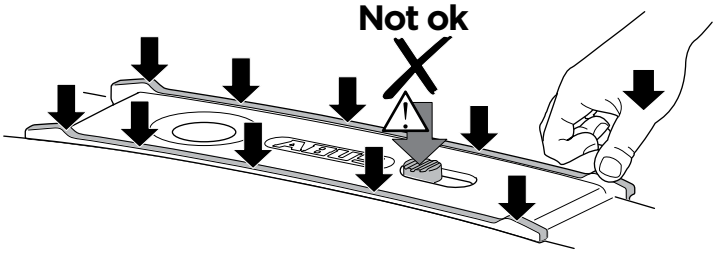

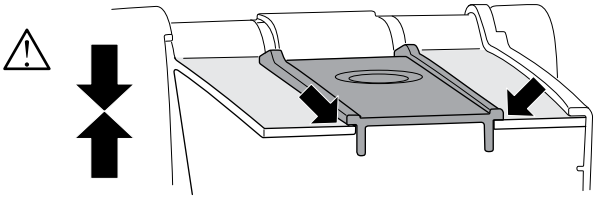

3

Ⓐ

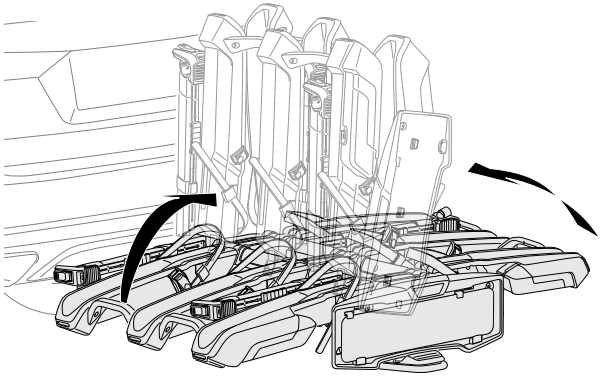

Ⓑ

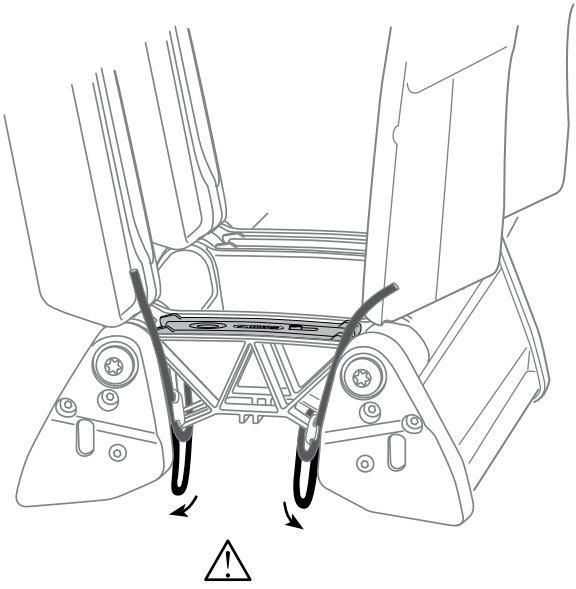

4

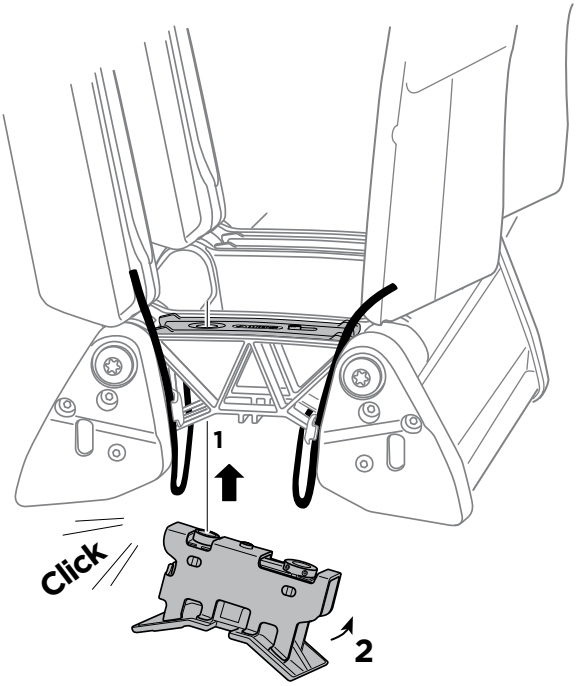

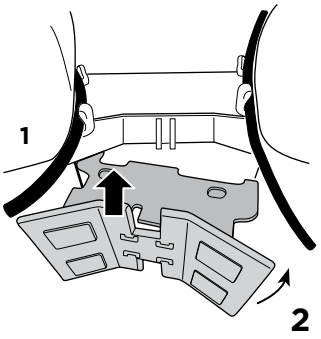

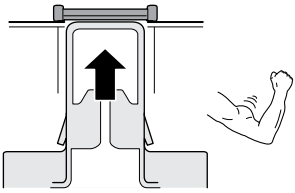

5

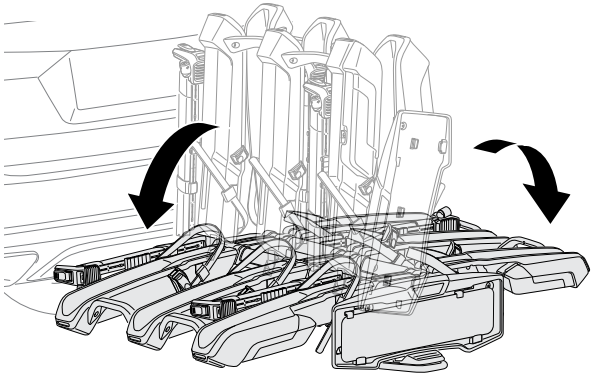

6

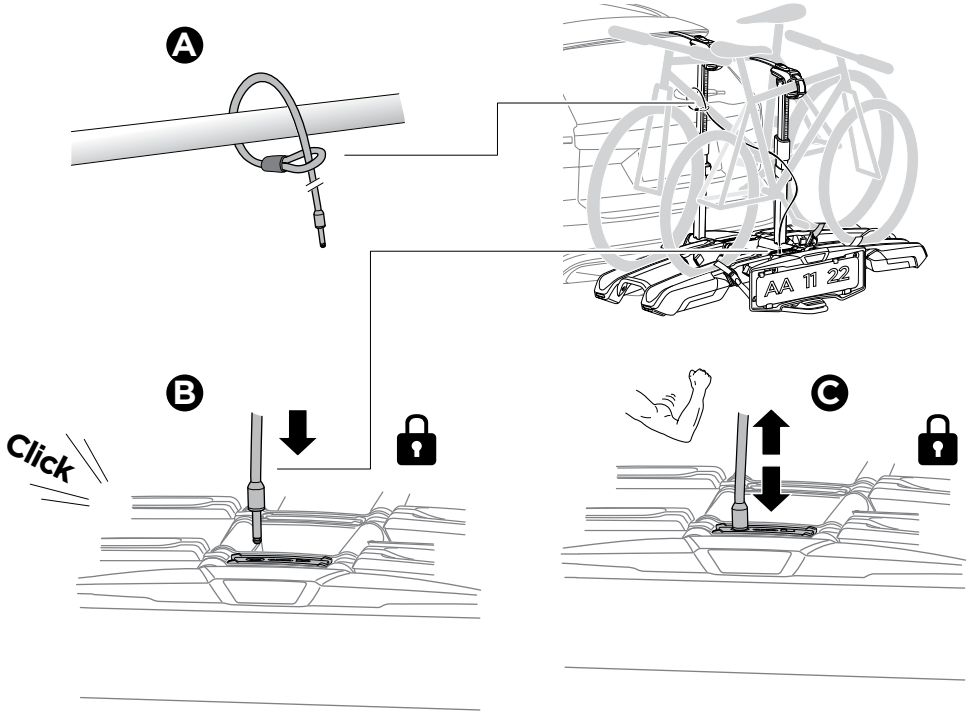

7



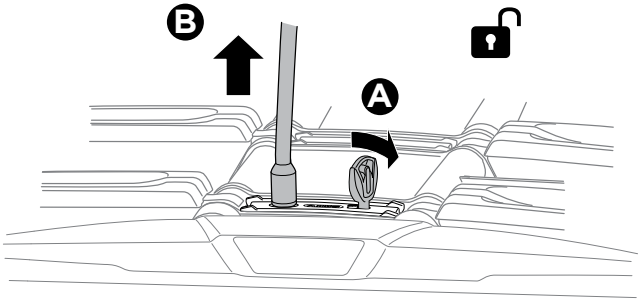

i

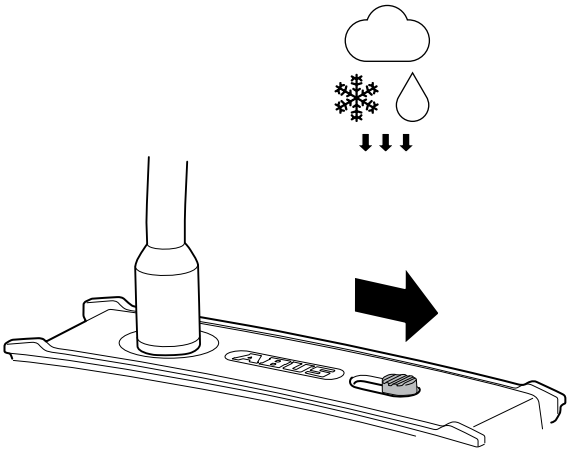

Thule Sweden AB
Borggatan 5
335 73 Hillerstorp, Sweden
info@thule.com
www.thule.com

© Thule Group Aug 2024. All rights reserved.

PART OF THULE GROUP
5562420001